ETC GROUP S.R.L
AIR FILTRATION TECHNOLOGIES

Italian Technologies for the Treatment
of Air and Fumes

MANUAL

NEWSCRUB AH BIOMASS

Water scrubbers for soot and fine particulate

NEWSCRUB AH 200 BIOMASS · NEWSCRUB AH 250 BIOMASS
NEWSCRUB AH 300 BIOMASS · Clinear 250L BIOMASS

NEWSCRUB
BIOMASS



Address: Strada delle Campagne 10,
61010 Tavullia (PU), Italy

Tel: +39 0541 1646150 | +39 0541 955062

WhatsApp: +39 3737755779

Email: informazioni@etcgroupsrl.biz

PEC: etcgroupsrl@pec.libero.it

Web: www.etcgroupsrl.it

Legal notice: free movement of the product within the European Union

This machine bears the CE marking and is accompanied by the EC declaration of conformity with Directive 2006/42/EC and the other applicable Union legislation. Under Articles 34-36 TFEU and Article 6 of Directive 2006/42/EC, Member States may not prohibit, restrict or impede the placing on the market and putting into service of a compliant machine. The instructions are supplied in the official language of the country of destination.

National and local requirements on installation and use remain applicable (Art. 15 of Directive 2006/42/EC), provided they do not require modifications to the machine. Any measure preventing or delaying its putting into service must be justified in writing, stating the rule and the specific risk on which it is based. Failing such justification, the manufacturer and the purchaser reserve the right to refer the matter to the European Commission's SOLVIT network and to take action to protect their rights, including claims for damages.

Document identification

Manufacturer	ETC Group S.r.l. – Strada delle Campagne 10, 61010 Tavullia (PU), Italy
Product	NEWSCRUB AH BIOMASS water scrubbers for soot and fine particulate
Models	NEWSCRUB AH 200 BIOMASS · NEWSCRUB AH 250 BIOMASS · NEWSCRUB AH 300 BIOMASS · Clinear 250L BIOMASS
Document	Technical datasheet and user, installation and maintenance manual – ETC-MAN-AH-BIOMASS-001 – Rev. 1.0 – 2026

ETC Group S.r.l. reserves the right to change the technical characteristics of the product and of the manual without notice. Images and drawings are indicative. The manufacturer may update the model and power of components (for example the pump) without notice, to ensure the best performance.

Contents

PART 1 – TECHNICAL DATASHEET

1. The NEWSCRUB AH BIOMASS range
2. Operating principle
3. Common construction features
4. Technical data and dimensions
5. Range components and optional extras
6. Conformity

PART 2 – USER, INSTALLATION AND MAINTENANCE MANUAL

7. General warnings
8. Intended use and limitations
9. Operation in detail
10. Description of the machine and its parts
11. Fill unit and solenoid valve
12. Recirculation pump and electrical connection
13. Float switch: connection, setting and contacts
14. Control panel and automated drain
15. Installation
16. Extraction fan
17. FilterPack post-filtration
18. Operating cycle
19. Safety
20. Maintenance
21. Troubleshooting
22. Transport
23. Disposal
24. Warranty
25. Frequently asked questions (FAQ)
26. Contacts

A. Annex A · Motorised drain valves

PART 1 – TECHNICAL DATASHEET

1. The NEWSCRUB AH BIOMASS range

NEWSCRUB AH scrubbers reduce the carbonaceous particulate (soot) and fine particulate in combustion fumes by recirculating hydrodynamic water washing, with no mechanical filter element to replace. They are water scrubbers: the main treatment concerns soot and fine particulate, while the effect on fumes, grease and odours is partial and depends on the installation. The compact line (NEWSCRUB AH 200 BIOMASS, NEWSCRUB AH 250 BIOMASS, NEWSCRUB AH 300 BIOMASS and Clinear 250L BIOMASS) covers indicative flow rates up to about 650 m³/h and is designed for pizzerias, restaurants, bakeries and small catering businesses.



Figure 1 – NEWSCRUB AH BIOMASS range: NEWSCRUB AH 200 BIOMASS, NEWSCRUB AH 250 BIOMASS, NEWSCRUB AH 300 BIOMASS and Clinear 250L BIOMASS.

Typical applications

Pizzerias, bakeries and restaurants with wood-fired ovens produce soot, fine particulate and odours. AH series scrubbers remove over 95% of the particulate and operate automatically, even 24/7.

- Wood-fired ovens for pizzerias and bakeries
- Wood-fired barbecues and grills
- Wood-fired rotisseries
- Coffee roasters
- Small biomass boilers

Summary data

Particulate	Odours (partial reduction)	Noise	Outlet air	Structure
> 95%	up to 70%	≤ 70 dB(A) at 1 m	~50 °C	AISI 304 stainless steel

2. Operating principle

All models work by recirculating hydrodynamic water washing, in three consecutive stages.

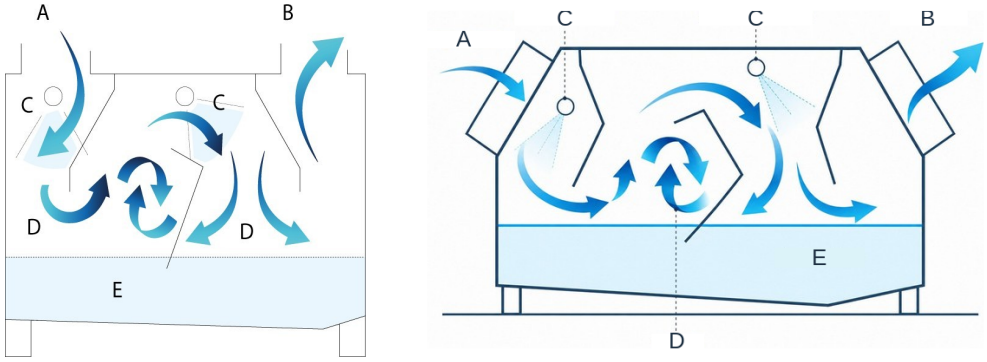

Figure 2 – Internal fluid dynamics: treatment stages on the left, process zones on the right.

A	Fume inlet	**B**	Fume outlet	**C**	Washing nozzles	**D**	Vortex	**E**	Settling

1. **Aerodynamic stabilisation (A-B).** The incoming fume flow enters a controlled-pressure chamber that stabilises the draught and ensures a constant contact time between gas and washing medium.
2. **Hydro-matrix atomisation (C-D).** A barrier of micro-droplets sprayed by the spiral nozzles intercepts the fumes. The surface tension of the droplets captures and weighs down particles and grease, separating them from the gas phase.
3. **Gravity settling (E).** The captured particulate falls by gravity into the collection tank. The cleaned air continues into the flue at about 50 °C, saturated with vapour and free of carbonaceous residues.

3. Common construction features

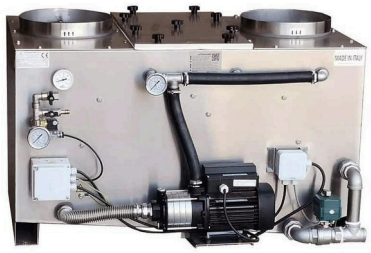

Figure 3 – Internal view: recirculation pump, motorised valve, control panel and stainless steel piping.

- Structure entirely in AISI 304 stainless steel, 1.5 mm thick: no ferrous parts subject to corrosion.
- Closed-loop recirculating washing, with minimal water consumption.
- Spraying with high-efficiency stainless steel spiral nozzles.
- Motorised drain valve with tripled torque (30 Nm), resistant to sediment, limescale and sludge.

- No mechanical filter element to replace: no filter costs, no clogging.

- Discharge to the sewer, via a settling tank in accordance with local regulations.
- Integrated tap and hose for quick internal washing; integrated thermometer and pressure gauges, depending on the model.
- Electrical control panel with thermal protection, main switch and timer.

- Noise emission ≤ 70 dB(A) at 1 metre; simplified weekly maintenance, with no consumable components to replace.

4. Technical data and dimensions

4.1 Dimensions

The drawing applies to the whole range: the models are structurally identical and differ only in dimensions.

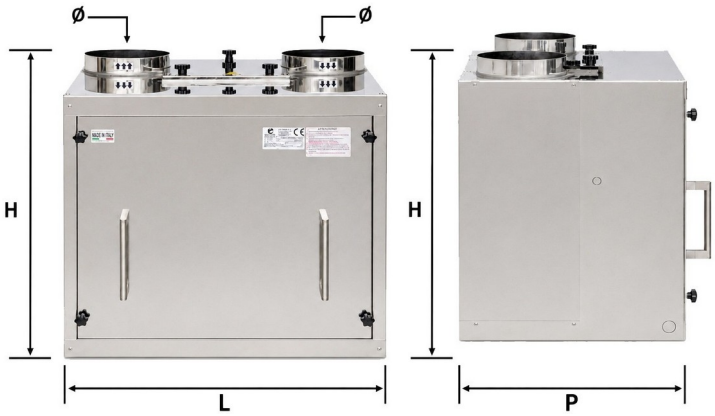

Figure 4 – Dimensioned drawing of the NEWSCRUB AH BIOMASS range (front and side view).

Ref.	Description (mm)	NEWSCRUB AH 200 BIOMASS	NEWSCRUB AH 250 BIOMASS	Clinear 250L BIOMASS	NEWSCRUB AH 300 BIOMASS
L	Tank width	745	940	990	1.100
P	Tank depth	360	420	550	650
P+	Depth incl. projections	560	610	740	850
H	Height	670	670	660	670
Ø	Fume inlet and outlet diameter	200	250	250	300

4.2 Technical data by model

Data	NEWSCRUB AH 200 BIOMASS	NEWSCRUB AH 250 BIOMASS	Clinear 250L BIOMASS	NEWSCRUB AH 300 BIOMASS
Air flow rate	up to 250 m³/h without extraction fan; max recommended 800 m³/h with extraction fan	up to 250 m³/h	up to 320 m³/h	up to 650 m³/h
Empty / operating weight	~49 / ~91 kg	~57 / ~120 kg	~62 / ~143 kg	~80 / ~190 kg
Water content	~42 litres	~63 litres	~81 litres	~110 litres
Spiral nozzles	5 (3+2)	7 (4+3)	8 (4+4)	9 (6+3)
Pump	ETC CM 5-3 – 0.55 kW	ETC CM 5-3 – 0.55 kW	ETC CM 5-3 – 0.55 kW	ETC CM 5-5 – 0.75 kW
Power supply	230 V / 50 Hz single-phase	230 V / 50 Hz single-phase	220 V / 50 Hz single-phase (3 A)	220 V / 50 Hz single-phase (3.4 A)

Common values	Water consumption: recirculating plus evaporation · Drain valve: manual, automated optional · Efficiency: > 95% particulate, up to 70% odour reduction · Outlet air temperature: ~50 °C, saturated with vapour · Structure: AISI 304 stainless steel, 1.5 mm thick · Fume inlet and outlet: female · CE conformity

5. Range components and optional extras

All components and accessories indicated as optional are optional extras. The actual configuration and supply are defined solely by the quotation, which prevails over any differing or inaccurate wording in this document. Errors and omissions excepted.

5.1 Extraction fan with inverter



Extraction fan for NEWSCRUB AH 200 BIOMASS

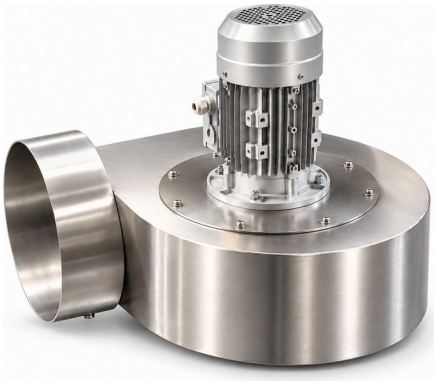

Extraction fan for NEWSCRUB AH 250 BIOMASS

AISI 304 stainless steel centrifugal extraction fan, installed downstream of the machine on the treated fume outlet duct. It ensures the nominal flow rate even with high back pressure. The extraction fan is supplied together with the inverter, which continuously adjusts the flow rate to the actual load of the system.

Toshiba inverter for extraction fan control



Single-phase 230 V inverter



Three-phase 380 V inverter

The inverter adjusts the speed of the extraction fan and therefore the air flow rate. It is needed only for extraction fans mounted above the scrubber, where the system requires it. Recirculation pumps are not connected to the inverter and run at fixed speed. The single-phase version (red) connects to the 230 V line and controls extraction fans up to 2.2 kW even where no three-phase supply is available; the three-phase version (black) connects to the 380 V line. It ramps up the motor without inrush peaks and protects it with an alarm and thermal cut-out.

- AISI 304 stainless steel centrifugal extraction fan, sized to the model's flow rate.
- NEWSCRUB AH 200 BIOMASS: up to 250 m³/h without extraction fan; with extraction fan, maximum recommended 800 m³/h.
- Without an extraction fan the models operate up to the nominal flow rate; the extraction fan is needed for high back pressure or long ducts.

SAFETY WARNING: After switch-off the inverter retains a dangerous residual electrical charge. Wait at least 15 minutes after disconnecting the power supply before opening the cover or accessing the terminals. All work must be carried out exclusively by a qualified electrician.

5.2 Motorised drain valve



Motorised valve with control panel

Motorised ball valve with 220 V – 50 Hz electric actuator. The tripled torque, up to 30 Nm, ensures opening and closing even with muddy sediment, limescale or solid residues in the washing water. Automatic operation integrates with the control panel and timer. Robust construction for continuous 24/7 use. Optional, as an alternative to the standard manual drain. The float switch manages automatic water refilling and the level.

5.3 Electrical control panel



Figure 5 – Electrical control panel.

Integrated panel with thermal protection, main switch, pump and fan control and programmable timer for automatic draining. Factory pre-assembled wiring, IP54 protection rating, accessible terminal board for site connections. Includes the safety isolator near the machine required by CEI standards. NEWSCRUB AH 200 BIOMASS and NEWSCRUB AH 250 BIOMASS: 230 V single-phase 50 Hz; Clinear 250L BIOMASS and NEWSCRUB AH 300 BIOMASS: 220 V single-phase 50 Hz. Optional.

5.4 Covers for outdoor installations



Figure 6 – Covers: 1 machine without cover, 2 partial front cover in stainless steel, 3 full cover.

- **1 · Machine without cover.** Basic version for indoor installation, with pump, pressure gauges and connections exposed.
- **2 · Partial front cover in AISI 304 stainless steel.** Encloses the front side, where the pump, pressure gauges and connections are located, and protects them from rain, snow and sun. Spigots and top covers remain accessible; the panel is removed with stainless steel screws for maintenance. Optional.
- **3 · Full cover.** Aluminium profile frame with double sandwich-panel cladding: it encloses the entire machine for outdoor installation. The panels with handles open for inspection and maintenance. Optional.

- **Anti-freeze heating mat (optional, only with full cover).** Silicone heaters with adjustable thermostat, for harsh or mountain climates. When it freezes outside the heating switches on: the water in the tank and piping does not freeze and no condensation forms on the electrical panel. Power supply and electrical connection must be defined in the quotation and carried out by qualified personnel.



Silicone anti-freeze heating mat (optional): temperature adjustment knob, fixing spring and power cable.

5.5 Pump protection filter

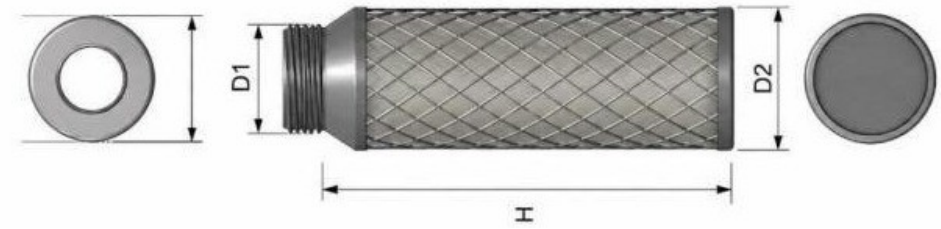

Mesh filter (D1, D2, H)

Mesh filter on the suction line of the circulation pump. It retains coarse solid residues in the recirculating water (settled soot and carbonaceous residues), extends pump life and reduces extraordinary maintenance. Quick cleaning by manual removal, without tools. Optional on all models, 1 mm mesh.

6. Conformity

Reference	Detail
CE conformity	EC declaration of conformity: Directives 2006/42/EC, 2014/35/EU, 2014/30/EU
Efficiency	Particulate removal > 95%, ACCREDIA accredited laboratory, standard UNI EN 13284-1
Structure	AISI 304 stainless steel: high thermal resistance, no parts subject to corrosion
D.M. 37/2008	ETC Group S.r.l., company qualified under Lett. A, C, D, E

PART 2 – USER, INSTALLATION AND MAINTENANCE MANUAL

READ BEFORE USE: read the manual carefully before installing and using the equipment and keep it for future reference. Installation must be carried out exclusively by qualified personnel.

7. General warnings

WARNING: basic rules.

- Drain the water from the machine every day.
- Do not operate with the machine switched off.
- Clean the inside of the machine with a water jet every 10-15 days.
- If placed outdoors, the machine MUST be fully enclosed with the outdoor cover.

- Visually check the condition of the rubber hoses.
- Every 2 months clean the section of flue between the oven and the machine.
- Every month, through the hatch, check the condition of the float switch and that it moves freely.
- Every 30 days check that there are no dusty residues in the pump motor.
- The scrubber does not act as an extraction fan.
- A maintenance and service contract is recommended.

8. Intended use and limitations

The machine is built to reduce carbonaceous particulate (soot) and fine particulate from combustion fumes; fumes and odours are treated only in part. It is used where non-toxic exhaust fumes must be cleaned before release into the environment: pizza ovens, wood-fired ovens, charcoal and wood grills, stoves, biomass boilers, coffee roasting and other combustion appliances with carbonaceous residues and particulate. It can serve several machines at once: in this case forced draught with a downstream extraction fan is required (chap. 16).

The model described has a double washing system. The washing water can be disposed of in settling tanks, collection tanks or the sewer. The machine discharges air saturated with vapour, at about 50 °C, free of carbonaceous particles and suspended impurities (reduction of up to 95% of total fine particulate).

WARNING: limitations of use.

- It is NOT designed to treat toxic, corrosive or environmentally harmful fumes or impurities.

- The operating fluid can and must be ONLY water: salt, antifreeze, alcohol and additives of any kind are prohibited.
- Installation requires watertight AISI 304 stainless steel ducting, without cowls (Chinese hats and similar).
- NO masonry flues: the moisture released during operation corrodes them.
- The machine must be placed on a flat, non-slip surface able to bear the operating weight and personnel; on a mezzanine it must be fixed to the wall and/or with chains to the ceiling.
- After consulting the manufacturer, it can be adapted to flues with a diameter different from the inlet and outlet (chap. 15).

9. Operation in detail

The smoke passes through the piping from the combustion source to the machine. The fume velocity slows due to the larger cross-section, and the water sprayed inside the unit envelops the impurities and drives them downwards. A further cleaning effect comes from the surface tension of the water at the bottom, which attracts the lighter particles when the fume flow is forced to pass close to it. The position and shape of the internal baffles create vortices that trap the wet particles and make them agglomerate.

There are two washing sections: the inlet, with six nozzles, and the centre of the machine, with a further set of three nozzles. After the second row there is a section of tubes which, once wet, act as a support surface for the lighter dust. Thanks to the energy released by pumping the water, the unit has its own draught (up to 650 m³/h on the compact models).

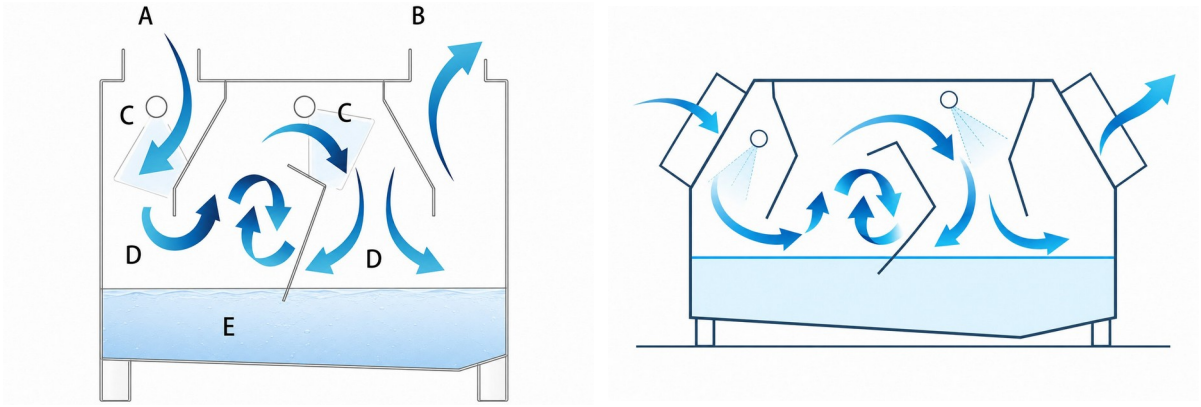

Figure 7 – Internal fluid dynamics: on the left the stages A-E described in chapter 2, on the right the fume path with 1st washing, vortex, 2nd washing, settling and clean air outlet.

NOTE: The five tubes after the second washing can be removed if the draught is insufficient. They normally serve to enhance treatment in systems with an extraction fan; removing them does not substantially reduce removal efficiency.

10. Description of the machine and its parts

The unit has three main parts: the welded stainless steel casing, to which the inlet pipe, internal baffles and flanges are fixed; the electric pump with the water distributors fitted with nozzles and the hydraulic piping connecting them to the pump; the float switch and solenoid valve system that regulates the mains water supply.

The machine is completed by a drain pipe with valve, manual or remote-controlled, which also includes the overflow; a pressure gauge for the incoming water and one for the pressure generated by the pump; a brass/zinc bar acting as a sacrificial anode, connected to earth.

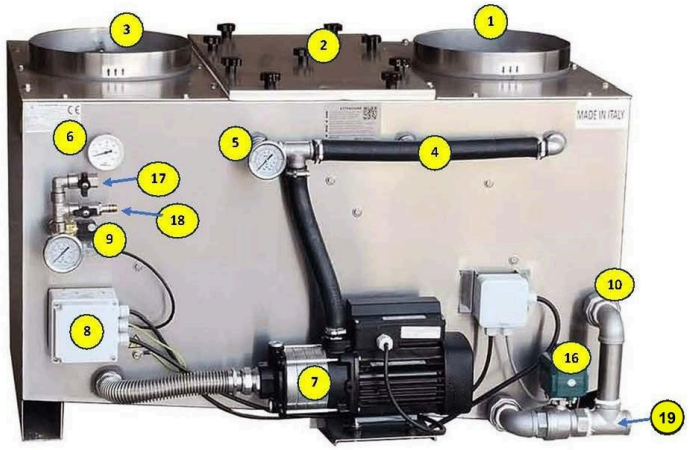

Figure 8 – The parts of the machine (the photo shows a model with right-hand inlet).

1	Fume inlet plate	**11**	1st row of nozzles
2	Inspection hatch	**12**	Float switch ball
3	Fume outlet	**13**	Middle baffle
4	Water pipe to nozzles	**14**	2nd row of nozzles
5	Water pressure gauge	**15**	Removable tubes
6	Fume temperature thermometer	**16**	Water drain valve
7	Pump	**17**	Water mains connection
8	Float switch electrical box	**18**	Service tap for washing
9	Fill solenoid valve	**19**	Water drain outlet
10	Drain + overflow		

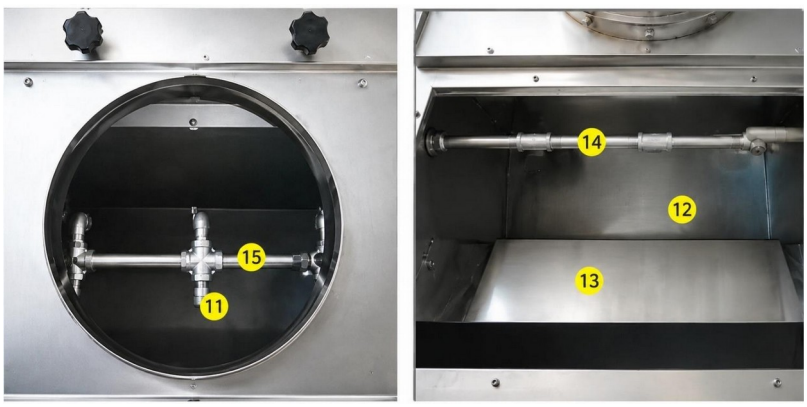

Figure 9 – Internal details: 1st row of nozzles (11), removable tubes (15), 2nd row (14), float switch ball (12), baffle (13).

11. Fill unit and solenoid valve

The machine receives water from the fill solenoid valve (brass, with ½" FF connections, ODE brand), which opens when energised. Power reaches it via the float switch, which controls its activation according to water demand. The water is directed towards the float switch, to clean it at every refill. The pressure gauge (0-10 bar) shows the mains pressure: during filling it reads 0, once the level is reached it shows the mains pressure value. Two ball valves connect the unit to the multilayer water mains pipe and to the rubber hose for internal washing.

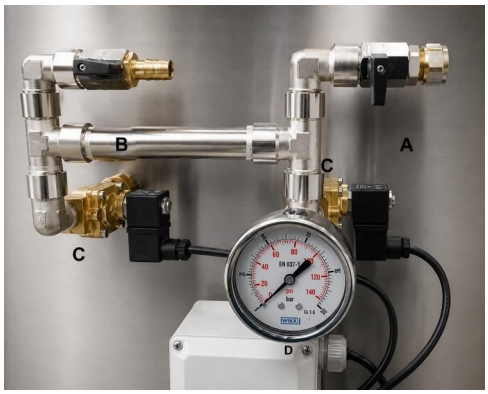

Fill unit: A/C ball valves, solenoid valve, D pressure gauge



Fill unit components (½")

12. Recirculation pump and electrical connection

The standard pump is a CM/ETC series multistage surface pump, not submersible, in AISI 304 stainless steel. It is designed to handle water, not high-density substances, coarse granular suspensions or highly corrosive liquids. For best operation and to avoid blockages, change the bath water at every work cycle, usually once a day.

The pump is powered at 220 V; the connection with the float switch starts it when the minimum water level is reached. In operation it works between 2 and 2.5 bar.



Recirculation pump and rating plate

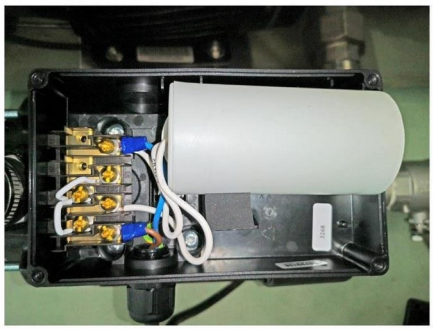

Pump electrical connection box

Pump installed by model

Model	Pump installed
NEWSCRUB AH 200 BIOMASS	ETC CM 5-3 – 0.55 kW
NEWSCRUB AH 250 BIOMASS	ETC CM 5-3 – 0.55 kW
Clinear 250L BIOMASS	ETC CM 5-3 – 0.55 kW
NEWSCRUB AH 300 BIOMASS	ETC CM 5-5 – 0.75 kW

NOTE: The manufacturer may change or update the power and model of the pump without notice, depending on the characteristics of the installation, to ensure the best performance.

13. Float switch: connection, setting and contacts

13.1 Electrical connection

Blue top centre: fill solenoid valve neutral. Blue wires top right: pump and line neutral. Brown bottom centre: pump phase. Brown wires bottom right: supply phase and fill solenoid valve. The float switch starts the pump when the minimum level is reached and stops the mains water flow at the maximum level. Adjustment is made with the two side screws.

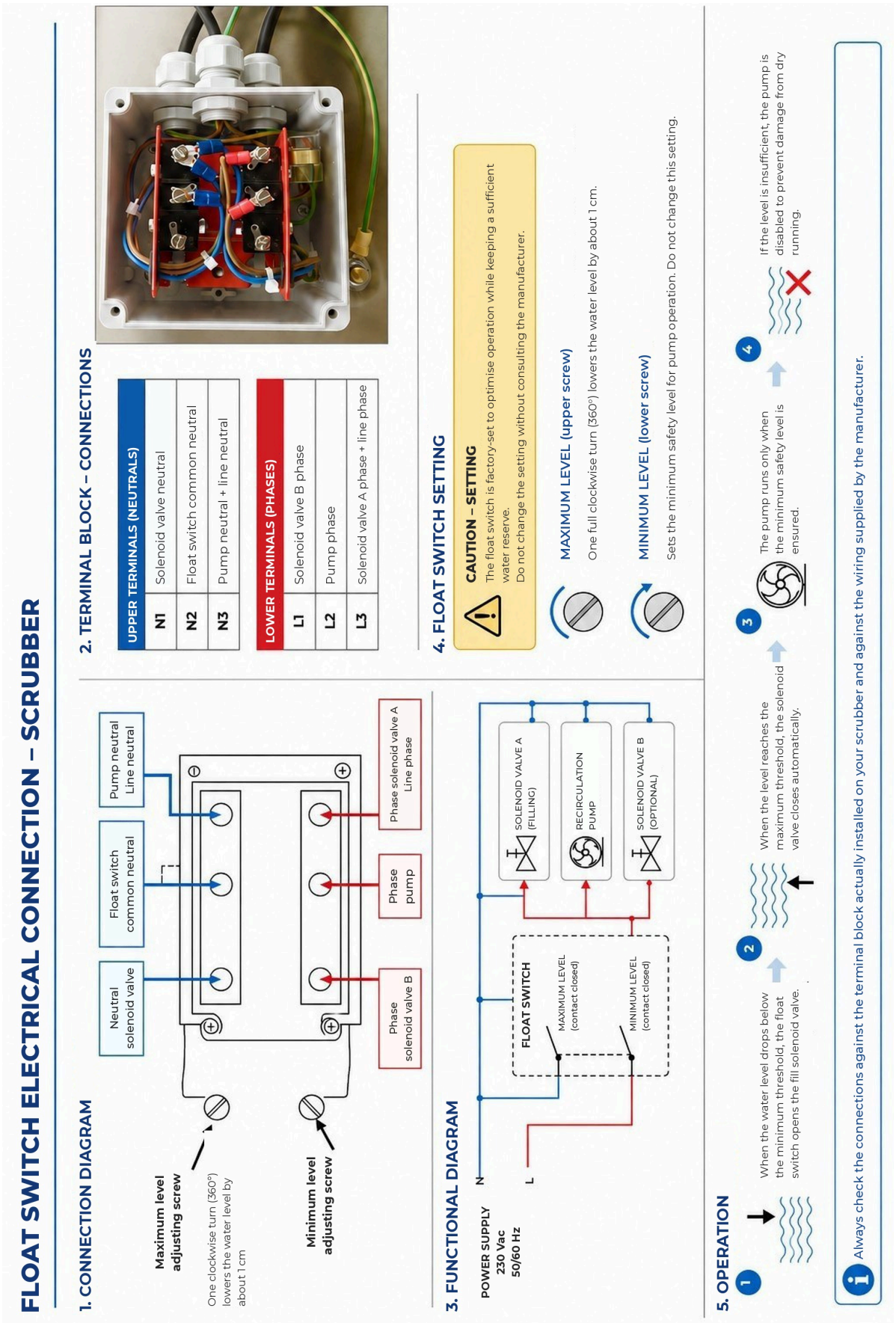

Figure 10 – Float switch electrical connection, functional diagram and contact states (low level, first trip, second trip).

13.2 Description of the electric float switch



Electric ball float switch with contact base

Construction	Brass body · stainless steel ball · PTFE rod · steel frame · Cu, Ag contacts
Electrical data and service life	15 A · 220 V · cable to use 6.3 × 0.8 · electrical parts 50,000 pulses · mechanical parts 10,000,000 cycles
Fluid, max temperature, weight	Water · 220 °C · 0.77 kg
Settings and connection	90, 110 or 130 mm arm · 1” screw connection, adjustment with two small internal screws that shift the contact point

NOTE: The action of the float switch is vital for operation. Although it is self-cleaning, check its condition and freedom of movement at every weekly cleaning.

13.3 Float switch replacement

The float switch is replaced as a complete assembly (ball, rod and contact base), not as a single part. The steps are illustrated in the figure and described in the following table: the numbers in the table correspond to the panels in the figure.

WARNING: work reserved for qualified personnel. Before starting, disconnect the power supply at the isolator and prevent it from being restored during the work; close the mains water ball valve and drain the tank. Risk of electric shock.

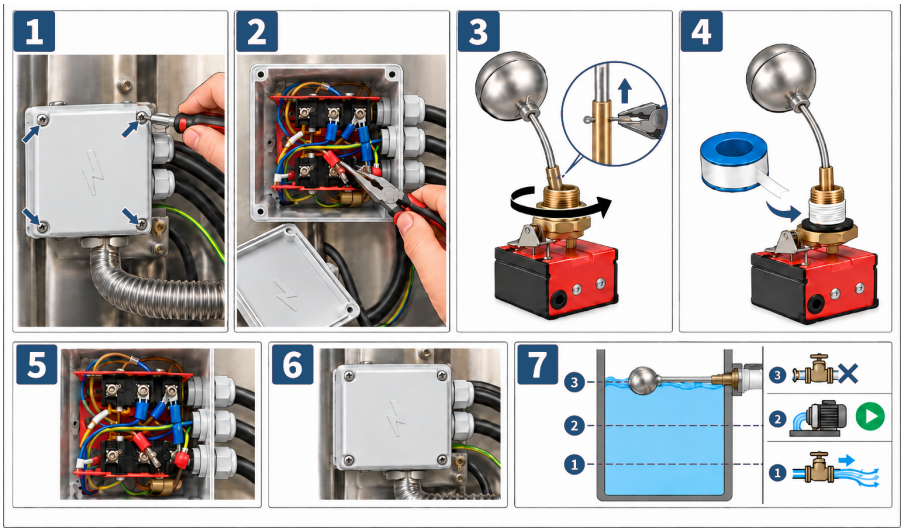

Float switch assembly replacement: steps 1 to 7

Replacement steps

1 **Opening the electrical box**

Unscrew the four screws of the float switch electrical box cover (arrows) and remove the cover.

2 **Disconnecting the wires**

Before disconnecting the wires, photograph or note the position of each colour on the terminals. Then pull off the cable lugs with pliers.

3 **Removing the assembly**

Unscrew the float switch assembly from the 1” threaded connection by turning it anticlockwise and remove it from the tank wall.

4 **Preparing the new assembly**

Wrap PTFE tape around the 1” thread in the screwing direction and check the seal. Screw the new assembly into place until tight, with the ball free to move over its full travel.

5 **Reconnecting the wires**

Refit the cable lugs according to the diagram in section 13.1 and Figure 10: blue top centre, fill solenoid valve neutral; blue top right, pump and line neutral; brown bottom centre, pump phase; brown bottom right, supply phase and fill solenoid valve. Reconnect the green-yellow earth conductor.

6 **Closing the box**

Refit the cover with the four screws and check that the cable glands are tight.

7 **Function test**

Reopen the mains water, restore power and watch the tank fill: the float switch must control the three levels shown in the figure and in the following table.

Level (fig. 7)	Float switch state	What must happen
1	Low level	The fill solenoid valve is open and mains water enters the tank
2	First trip, minimum level	The recirculation pump starts
3	Second trip, maximum level	The solenoid valve closes and water filling stops

After the test, check that the threaded connection does not leak and that the pump works between 2 and 2.5 bar. If the trip points do not match the levels, correct the setting with the two side screws of the float switch (section 13.1).

NOTE: earthing must be checked with an instrument by qualified personnel: the mere presence of the wire is not enough.

14. Control panel and automated drain

For models with remote-controlled motorised drain valve, the diagram shows the circuit wiring in the control panel. In position I the drain valve is closed and the machine is running (green lamp); in position II the drain solenoid valve is open and the machine is off, with the water draining (red lamp).

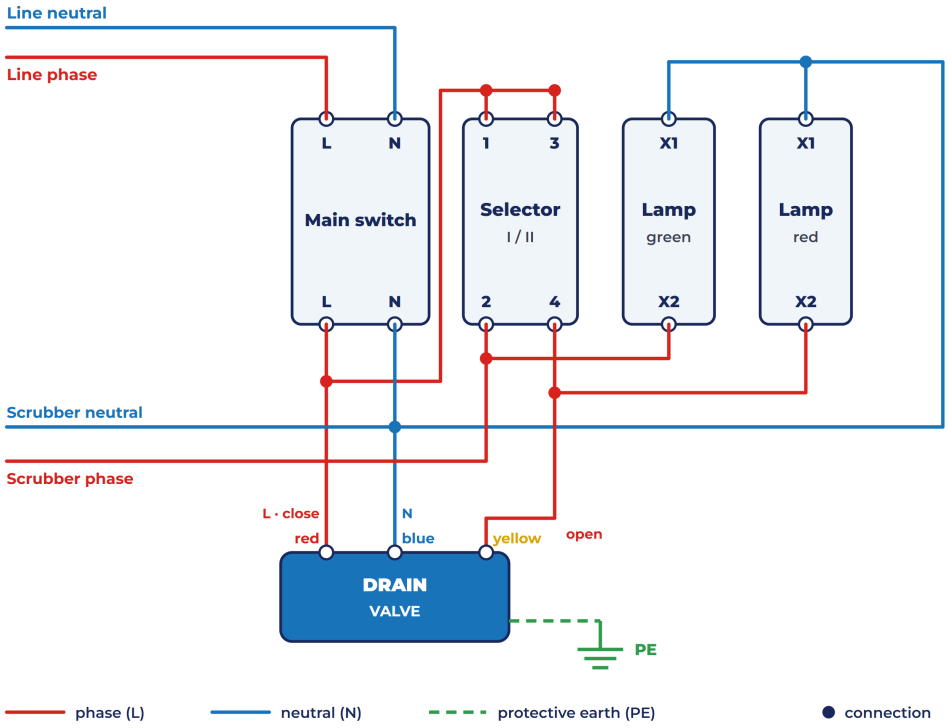

Diagram of the remote-controlled motorised drain (green lamp = running, red = draining)

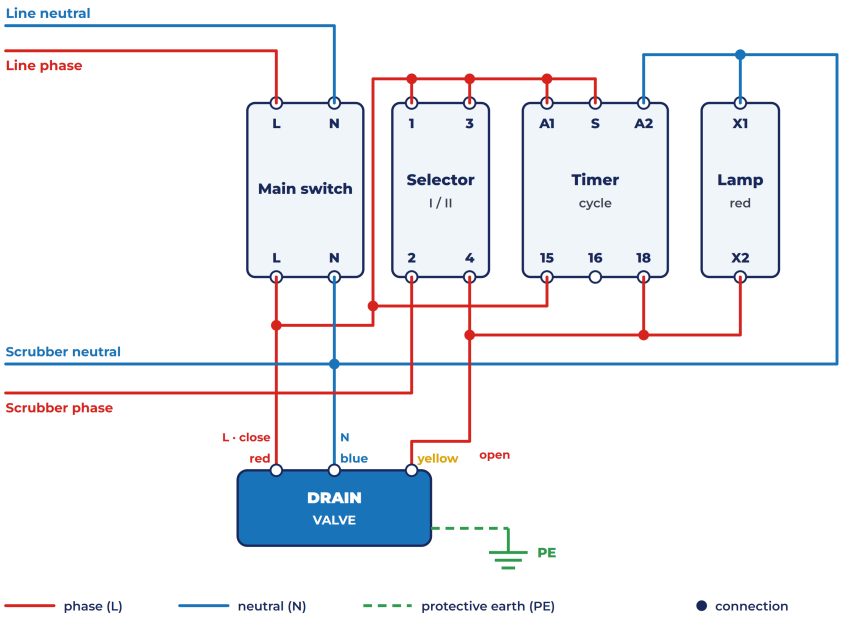

Wiring diagram with timer for automatic water change (24 h operation)

Other types of panel can be fitted, for example with a timer for continuous water change, which ensure 24/7 operation of the machine.

WARNING: installation and connection must be carried out by qualified personnel: risk of electric shock. Observe the colour scheme and the connections to the machine. If in doubt, contact the manufacturer.

NOTE: Remote-controlled drains and timer automation do NOT make the machine self-cleaning: the water must still be drained and changed and, at least once a week, the inside must be cleaned thoroughly.

15. Installation

SUPPLY ONLY: ETC Group S.r.l. supplies the equipment only. It does not carry out installations, site surveys or electrical or plumbing connections. All the work described is the responsibility of the installer's qualified personnel, in compliance with the regulations in force.

15.1 Location

The machine must be installed in a covered place protected from the weather; for outdoor installation it is supplied with a metal cover. The ambient temperature must remain between 5 and 50 °C, so that the water neither freezes nor exceeds 80 °C. Do not install in environments with potentially harmful, toxic or explosive dusts. The surface must be flat, non-slip and load-bearing (weight of the machine plus operator); on a mezzanine, fix it to the wall and to the mezzanine itself.

Installation requires a 230 V electrical connection, a water mains connection, a drain, and connection of the inlet pipe (from the oven) and outlet pipe (flue).

15.2 Supporting surface and prevention of resonance

Internal components such as the pump are optimised to reduce movement, but the unit generates micro-vibrations. If the installation is not carried out properly, mechanical resonance may occur. This is extremely rare (estimated at 1 in 2000) but has severe structural consequences. It can happen in two situations: if the machine stands on a non-rigid, wobbly, unstable or slippery surface; if the extraction fan is installed directly on top of the machine and transmits its vibrations to the scrubber body.

With resonance, the micro-vibrations are progressively amplified and the accumulated energy is released onto the structural parts, until the casing tears or cracks at the lower welds. The effect may look like a welding defect, but it is a structural failure due to mechanical fatigue caused exclusively by external vibrations.

IMPORTANT: mandatory requirements.

- **Rigid surface.** Position and fix the machine on a perfectly level, rigid, stable base, not subject to bending or slipping.
- **Extraction fan isolation.** Resting the extraction fan on the machine body is strictly prohibited. It must be installed and bracketed independently at least 20 cm from the scrubber, with anti-vibration joints on the connecting pipe if necessary, to prevent vibrations being transmitted to the casing.

15.3 Connections

Water connection

Connect the free connection of the solenoid valve unit (item 17 in figure 8) to the water mains with rigid pipe. Fittings such as those illustrated and installation by a competent plumber are recommended. The mains pressure must not exceed 8 bar.

Sewer connection

Connect permanently and watertight to the existing sewer, with pipes of 40 to 68 mm diameter, via a trap, to prevent fumes escaping from the overflow. Some inspection authorities (ASL) may require a settling tank: check beforehand.

Electrical connection

Connect to the 230 V mains with earthing (CE standards). For machines with a drain solenoid valve, follow the diagram, observing the wire colours. If the machine has an extraction fan, a three-phase socket is provided: the inverter supplied with the extraction fan controls its speed. Motor, inverter and solenoid valve must be connected by a competent electrician. A residual risk of electric shock remains due to the presence of water and heat: make connections carefully, leave no bare copper, do not route cables near heat sources, install the inverter and valve in places not exposed to heat, dirt and water, in closed boxes.

EARTHING SAFETY REQUIREMENTS: the constant movement of the liquid in the scrubber can generate stray currents. This is a physical phenomenon inherent in the hydraulic operation of the system, not a defect of the machine. To avoid malfunctions, galvanic corrosion and risk of electric shock, the system must be connected to a legally compliant earthing system, with a recommended resistance between 0 and 4 Ω. Earthing must be MEASURED with an instrument by qualified personnel before commissioning and checked periodically: the mere presence of the wire is not enough. The measured value must be recorded in the system documentation. Failure to comply with this requirement voids all liability of the manufacturer.

Connection to the flue

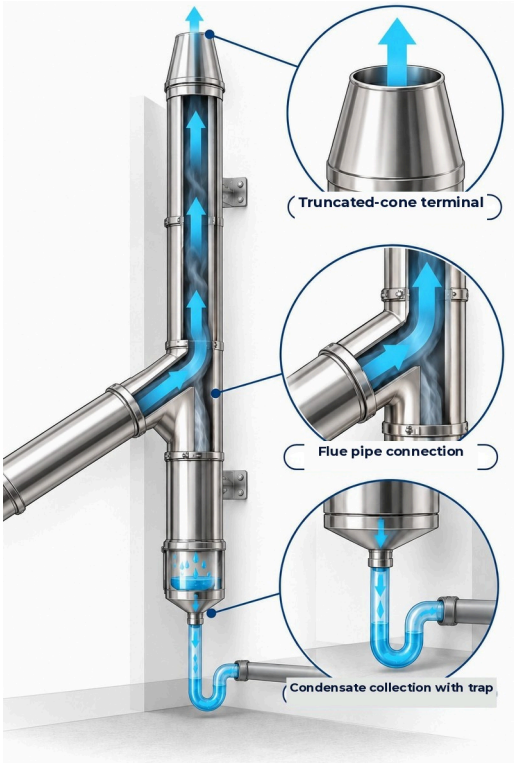

The connection must be made with watertight stainless steel pipes (AISI 316L). Downstream of the machine the pipes must be installed with the female end uppermost, to avoid condensate deposits in the joints. Avoid sharp or downward bends that retain moisture; maintain a minimum upward angle of 5°. No Chinese hats or wind cowls may be fitted at the top of the flue: only the truncated-cone terminal is permitted.

Figure 11 – Flue: truncated-cone terminal, male-female joint, condensate collection with trap.

15.4 Flue routes

When the oven has a smaller diameter than the connection (for example 200 versus 250), widen the cross-section immediately with a funnel-shaped transition and use large-diameter bends to reduce resistance. It is advisable to raise the machine on a support structure to shorten the downward section at the inlet: a downward section offers considerable resistance, because smoke tends to rise.

IDEAL POSITION: immediately after the oven or combustion appliance: it keeps the whole flue clean, reduces the risk of fire and makes maintenance easier. In the section between the combustion appliance and the scrubber, use double-wall pipes and clean it periodically to avoid draught losses and residual fire risks.

DRAUGHT RULES

- More bends = less draught.
- More horizontal run = less draught.
- Smaller pipe diameter = less draught.
- Low flue = less draught.
- For pizza ovens use Ø250 wherever possible; avoid flexible pipes, often corrugated inside, which increase resistance.
- Connect the vertical section with a Y, not a T, to limit resistance.



Figure 12 – Pizza ovens: use smooth Ø250 pipes (left), avoid corrugated flexible pipes (right).

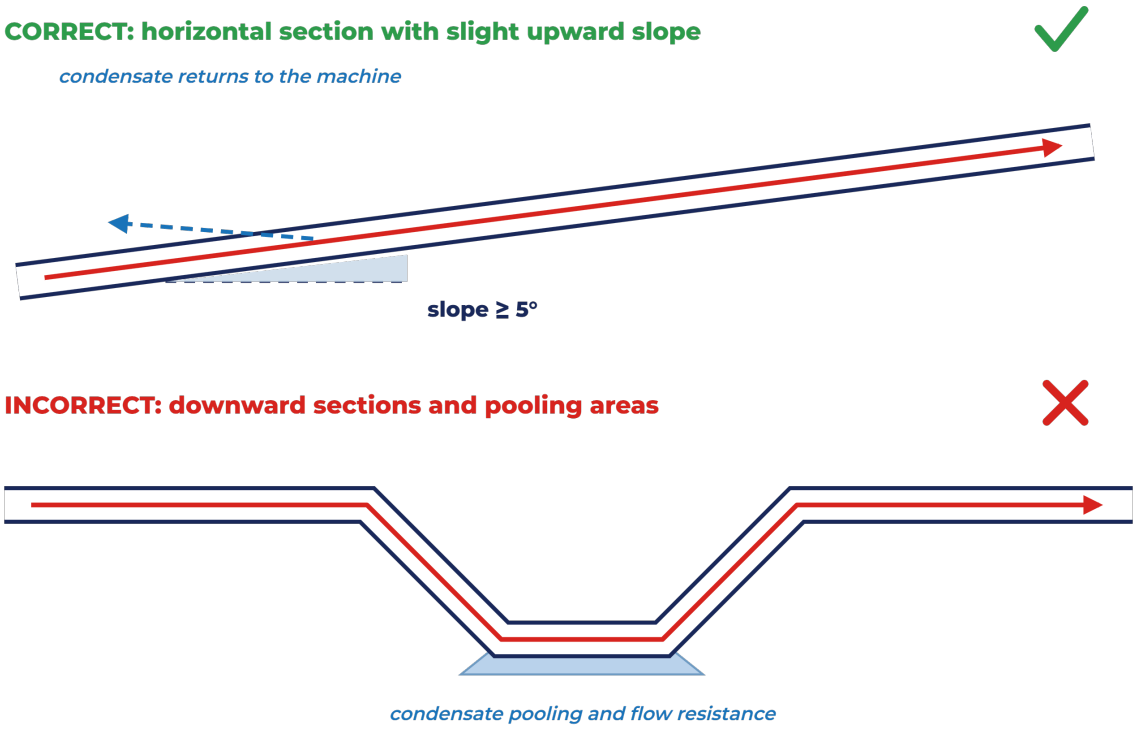

Figure 13 – Horizontal section: upward slope (correct) and downward section with condensate pooling (incorrect).

Avoid unsupported winding routes: a double S to get round an obstacle causes problems even with an extraction fan. It is better to drill through the obstacle (for example a wall) or use 45° or 30° bends, and never more than 90°. A T section can also reduce draught: prefer

Y connections or direct 45°+45° bends. Changes in cross-section must be made on straight sections and gradually.

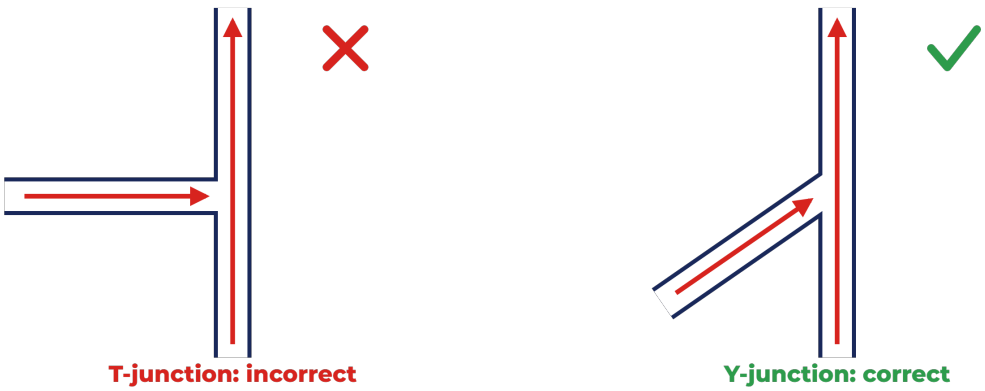



Figure 14 – Joints and bends: Y connection and two 45° bends (correct), T joint and sharp 90° bend (incorrect).

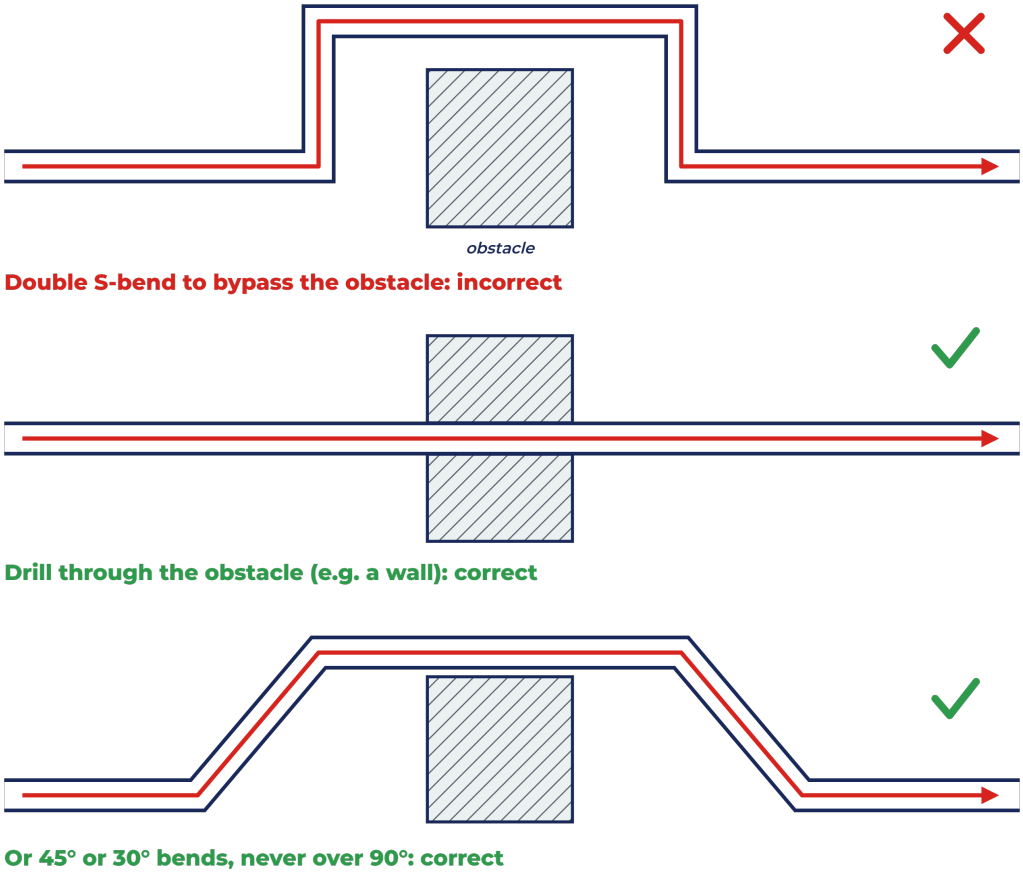

Figure 15 – Getting round obstacles: double S (incorrect); hole through the obstacle and 45° or 30° bends (correct).

Installation examples: on a horizontal structure, on a terrace or outdoors with a cover box and remote-controlled drain. In outdoor installations check that the temperature in the box does not fall below 5 °C or exceed 80 °C.

1. On support structure: reduces the downward section at the inlet

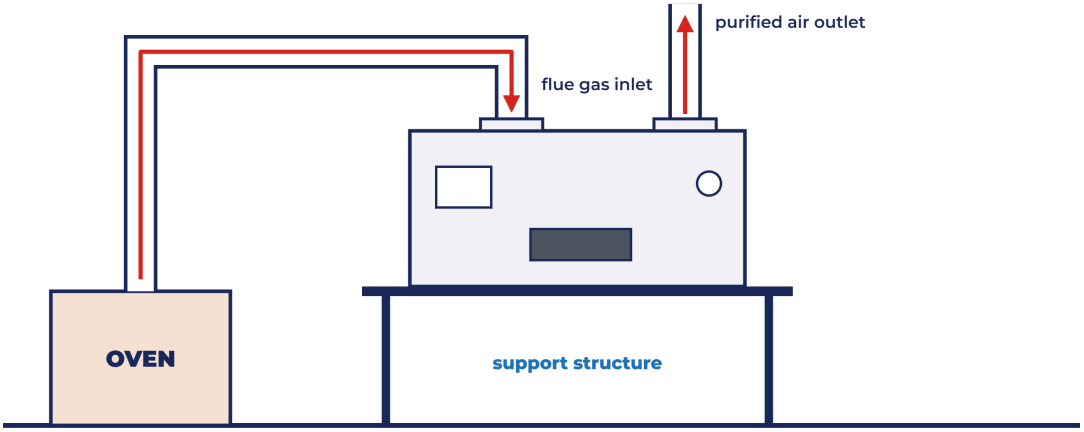

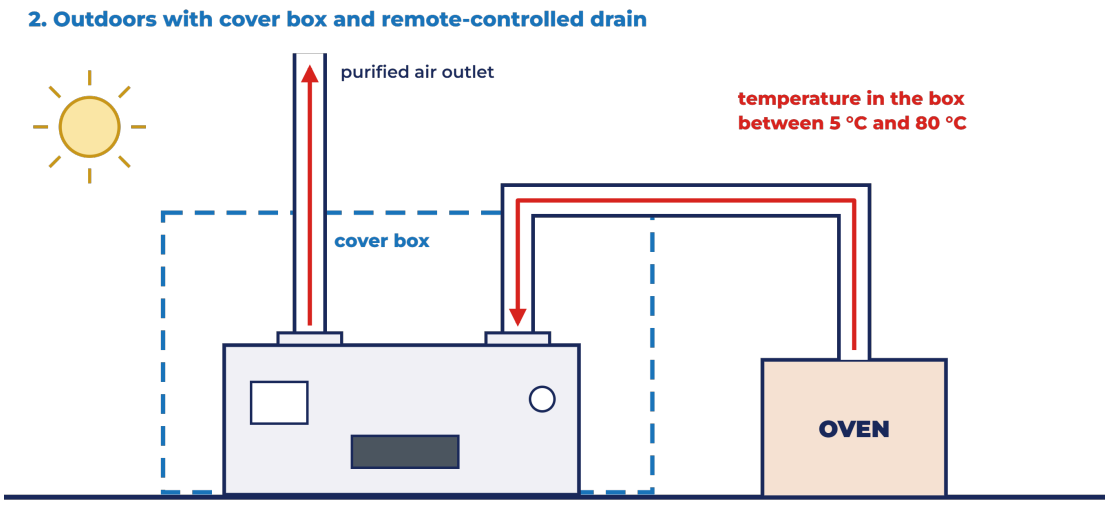

Figure 16 – Installation examples: on a support structure and outdoors with cover box and remote-controlled drain.

16. Extraction fan

The machine has no extraction of its own but, once running, it does not hinder the flue draught. In particular cases (a lot of smoke, several appliances, many bends) an extraction fan is recommended or necessary and can be supplied by the manufacturer. If proceeding independently, bear in mind that: stainless steel centrifugal extraction fans placed downstream of the machine are used; if they are not built as a one-piece scroll housing they must be sealed with silicone; “boxed” fans or fans with the motor exposed to the flow are not used. The fan is mounted above the fume outlet.

NOTE: the extraction fan is NOT installed directly on the machine, but on dedicated brackets. It has its own 230 or 380 V socket and its own control inverter,

independent of those of the machine. The type of extraction fan has a major effect on the result: consult the manufacturer.

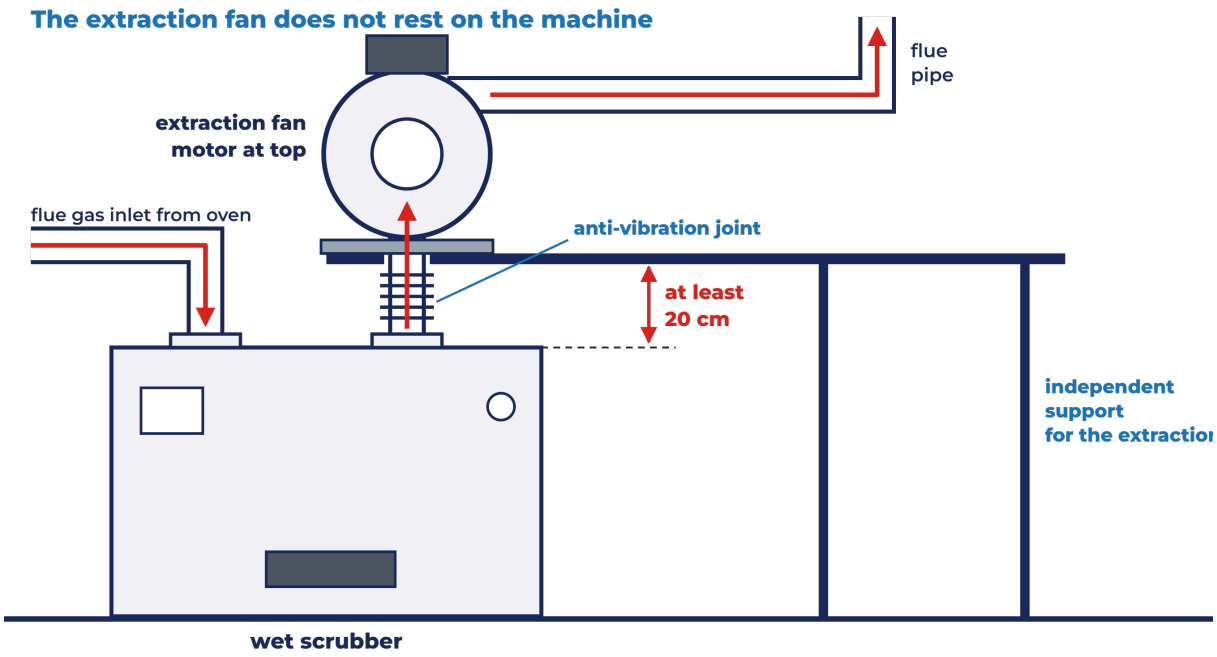

Figure 17 – Stainless steel centrifugal extraction fan mounted downstream, on independent brackets, at least 20 cm from the machine.

16.1 INOX4EBR extraction fan (formerly ETCRL)

Scroll-type fan with welded AISI 304 stainless steel body, built for humid air; one-piece sealed casing with condensate drain at the outlet. It is used with the motor at the top, on dedicated brackets. Three-phase motor for use with an inverter, with delta (220 V) or star (380 V) configuration. Condensate drain DN15 (½").



Figure 18 – INOX4EBR scroll-type extraction fan.

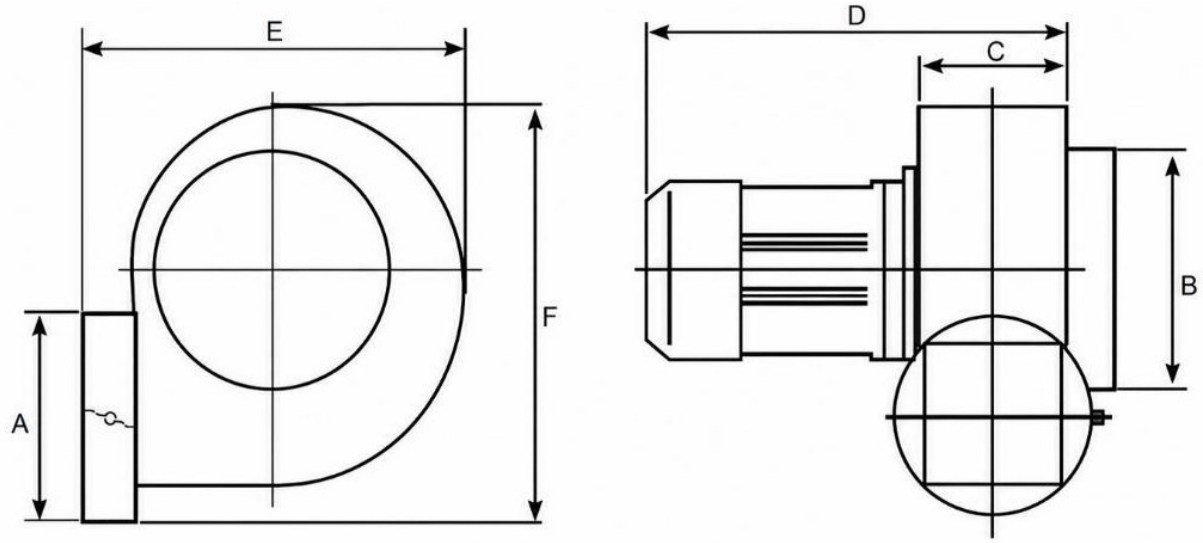

Figure 19 – Dimensions A-F of the INOX4EBR extraction fan (front and side view).

Model	A	B	C	D	E	F
INOX4EBR220	204	248	150	420	534	485
INOX4EBR280	305	295	215	500	503	640

Dimensions in mm. For further information see the extraction fan manual.

The extraction fan is optional for all models (NEWSCRUB AH 200 BIOMASS, NEWSCRUB AH 250 BIOMASS, NEWSCRUB AH 300 BIOMASS, Clinear 250L BIOMASS) and is sized to the flow rate of the system.

17. FilterPack post-filtration

To further reduce odours, or for fumes requiring additional treatment, a post-treatment device with various types of filter media is available, which can be fitted at the machine outlet. Because of its robustness it must be mounted on the extraction fan.

The FilterPack 1000 has a holder with four slots for the filters (alumina, fleece, labyrinth). It cannot rest directly on the machine: a manifold is secured to the machine outlet with a ring of screws and a second ring secures it to the airbox. The joints must be sealed with silicone. A hopper (supplied) is installed above the airbox, also fixed with screws and silicone; finally the extraction fan is fixed by means of its Ø250 male/female coupling. The extraction fan should be secured to a stable support (for example wall brackets) so that it does not vibrate. The assembly, sized to the model's flow rate, releases at most a puff of vapour that dissipates within a few metres.



Figure 20 – FilterPack mounted on the machine outlet: manifold, airbox with filter slots and air outlet; on the right the applicable filter media.

18. Operating cycle

Zero point. Machine empty, connected to the water mains and not powered; drain valve closed.

Switching on. Simply power the machine: the float switch, which acts as a switch, controls water filling and, at the minimum level, starts the pump; at the maximum level the water inflow stops. Switch the machine on 5-10 minutes before the oven or combustion appliance, so that it works with clean water.

Operation. The machine remains active as long as it receives water and power. Water lost through evaporation is topped up by the float switch. Without timer automation the machine operates in these conditions for about 8-10 hours.

Switching off and draining. Once the combustion appliance is off, disconnect the power and open the drain valve to drain the dirty water. Once the valve is closed again, the machine returns to the zero point.

NOTE: At least once a week rinse the inside of the machine to remove coarse dirt and check for foreign bodies (lumps of soot fallen from the flue, leaves and the like).

19. Safety

Downstream of the machine, in steady operation, there are no fire problems. In the section from the combustion appliance to the machine, however, double-wall pipes must be used: this section tends to get dirty and must be cleaned periodically to avoid draught losses and residual fire risks, so the machine must be installed as close as possible to the combustion appliance. Installing the flue is not a trivial task and must be done by trained and equipped personnel.

A residual risk of electric shock remains due to the presence of water and electricity in the same unit: pay attention to earthing and do NOT work on the machine without disconnecting the power supply. In operation the machine reaches 50-60 °C: beware of burns. Do not put your head inside the machine: sooty residues are toxic. When cleaning the inside, wear gloves and protect skin and eyes; baffles may have sharp edges and the nozzles are projections that can cause injury. Any modification to the system or to the volume of gas to be treated must be agreed with the manufacturer.

INVERTER RESIDUAL CHARGE WARNING: the inverter retains a dangerous residual electrical charge even after switch-off. Wait at least 15 minutes after disconnecting the power supply before opening the cover or accessing the terminals, and check that no voltage is present. Work reserved for a qualified electrician.

20. Maintenance

20.1 Pre-maintenance operations

- Disconnect the machine from the mains, preventing it from being reconnected by others.
- Switch off the fireplace and combustion appliance completely and wait until no combustion residues remain.
- Wear the required PPE (gloves, safety shoes).

20.2 Routine maintenance

Frequency	Operations
Daily	Change the machine water once a day (or more often, if needed).
Every 7 days	Clean deposited residues from the inside with a jet of clean water and check for foreign bodies.
Every 15 days	Clean the section of flue from the combustion appliance to the machine.
Weekly	Check that there are no dusty residues in the pump motor and that it can cool; check the integrity of the rubber hoses and that there are no leaks.
Monthly	Check the power cable, earthing (instrument test) and electrical connections in the float switch box; through the hatch check the bar (sacrificial anode), the condition of the float switch and its freedom of movement.
If outdoors	Check that the temperature does not fall below 0 °C or exceed 50 °C and that, in rain, water does not reach the electrical components if the machine is mounted outdoors without a cover.
If with extraction fan	Check the condition of the joints, that there are no leaks and that they are tight; visually check electrical connections and cables.
Every six months	Full inspection by qualified personnel.

- Internal cleaning is done with water only: unless otherwise indicated by the manufacturer, do not use additives (detergents, soap, acids, ammonia and the like).
- The manufacturer declines all liability for incorrect or careless installation, use of unsuitable materials, unqualified labour, lack of or negligent maintenance, arbitrary modifications or connection to inadequate systems.
- Any service call requested that is not covered will be charged for travel, labour and materials.

21. Troubleshooting

Even with correct installation, problems due to wear or accidental causes may arise over time. The rule is the same for every fault: identify the cause, work with the machine switched off and in safe conditions, and always inform the manufacturer. Electrical work must be carried out by qualified personnel.

A. Water and levels

Problem	Cause	Solution
The machine does not fill with water	Limescale in the fill solenoid valve (0/10 pressure gauge does not return to zero) · float switch stuck in maximum position	Remove the 4 screws of the valve body and remove the limescale · check the electrical connections · clean and free the float switch
Continuous discharge from the overflow	Float switch out of adjustment or stuck · solenoid valve not closing	Tighten the upper screw by one turn · free the float switch · separate the coil from the valve body with the circuit isolated: if it closes, the problem is in the control; if water still passes, the valve body is stuck or faulty
The pump does not start	The float switch has not reached the first level · no power supply	Wait for filling · check float switch and power supply (electrical checks by qualified personnel)
Very dark water and slightly acrid smell	Normal condition: it is the captured dirt	Drain and replace the water; it is not a fault
A lot of foam	Water with residues or additives	Drain, rinse and fill with clean water · change the water more often · do not use antifoam unless instructed by ETC Group
Frequent scaling and limescale	Hard or untreated water (including well water)	Install a water softener · do not use well water that has not been analysed and treated
Water leaks from the piping	Downward sections or pooling areas · male-female connection reversed	Reposition the pipes with an upward slope · fit the female downstream of the male
Ice in the tank or piping	Outdoor installation with sub-zero temperatures	Empty the machine after operation · with full cover, provide anti-freeze heating (optional)

B. Pump and pressure

Problem	Cause	Solution
High pressure (2.5–3 bar or more) and weak spray	Nozzles or passages partially blocked	Check the nozzles through the inspection hatch · have them removed and cleaned by competent personnel
Very low pressure	Insufficient water level · air at the pump inlet · obstructions in the impellers · worn pump	Check the level and pump inlet · have the technician carry out back-flushing and check the pump
Pressure gauge fluctuating	Irregular suction, air or cavitation	Check the water level first · check the seal at the pump inlet
Oily liquid from the pressure gauge	Leakage of the glycerine filling	Replace the pressure gauge
New noise from the pump	Fan touching the cover · hard objects or agglomerates at the inlet or in the impellers	Switch off safely · check and remove the cause
Leaking clamp or black hose	Loose clamp · swollen, cracked or deformed hose	Tighten the clamp · if the leak continues, replace the hose
Scaled nozzles	Limescale or deposits	Remove the nozzle (competent personnel) · suitable descaler with PPE and safety data sheet · rinse · use a stiff, thin tool without deforming the geometry

C. Drain

Problem	Cause	Solution
Automatic drain valve does not open	Impurities, sediment or limescale · actuator or control problem	Mechanical and electrical diagnosis in safe conditions · clean the valve body · call the technician
The valve opens but no water comes out	Obstruction downstream, in the drain pipe	Clean the pipe up to the end point
The tank does not empty completely	Obstruction after the machine (cross-sections smaller than Ø40 mm, routes with build-up)	Clean the drain line · review cross-section and route
Smoke from the sinks	No trap on the drain	Install a trap on the drain line

D. Smoke and draught

Problem	Cause	Solution
Sudden drop in draught	Clogged nozzles or tubes · pump failure · excessive water level (float switch stuck) · clogged flue (upstream or downstream) · poor room ventilation	Clean nozzles and piping · check the pump · free the float switch · clean the flue · ensure make-up air to the room
Reduced draught on a machine that has always worked	Untreated section between generator and scrubber dirty	Clean the section (at least every three months, sooner if very dirty)
Insufficient washing (grey smoke)	Dirty water (infrequent change) · clogging that prevents spraying	Empty, wash and change the water at least once a day (several times with a lot of dust) · keep the parts clean
Smoke from hatch or joints	Knobs not tightened evenly · overpressure from a badly installed or badly adjusted fan	Tighten the knobs evenly · check fan installation and adjustment
Smoke in the room with the extraction fan stopped	Extraction fan off with oven lit	Reduce the fuel and restore the extraction fan
Smoke leaking from the overflow and joints with extraction fan	Extraction fan installed upstream of the scrubber (overpressure)	Install the extraction fan downstream of the scrubber
Condensate from the extraction fan	Condensate drain not connected or closed	Connect the condensate drain to a suitable drain, without leaks or pooling
Vibration or resonance	Non-rigid base · extraction fan resting on the machine	Rigid, stable and level base · bracket the extraction fan independently
White vapour from the chimney	Outlet air saturated with vapour at about 50 °C: normal condition	No action needed; more visible with cold air or high thermal load

E. Electrical system and safety

Problem	Cause	Solution
The RCD or circuit breaker trips	Leakage: coil of the solenoid valve, water in the motorised valve, pump, wet connections or contacts, damaged wiring	Make safe · diagnosis by a qualified electrician · measure the earthing
Localised corrosion or perforation	Leakage currents, potential differences or ineffective earthing	Measure the earthing with an instrument · inform ETC Group
The casing weld leaks	Vibration or other external causes	Inform ETC Group before any work

22. Transport

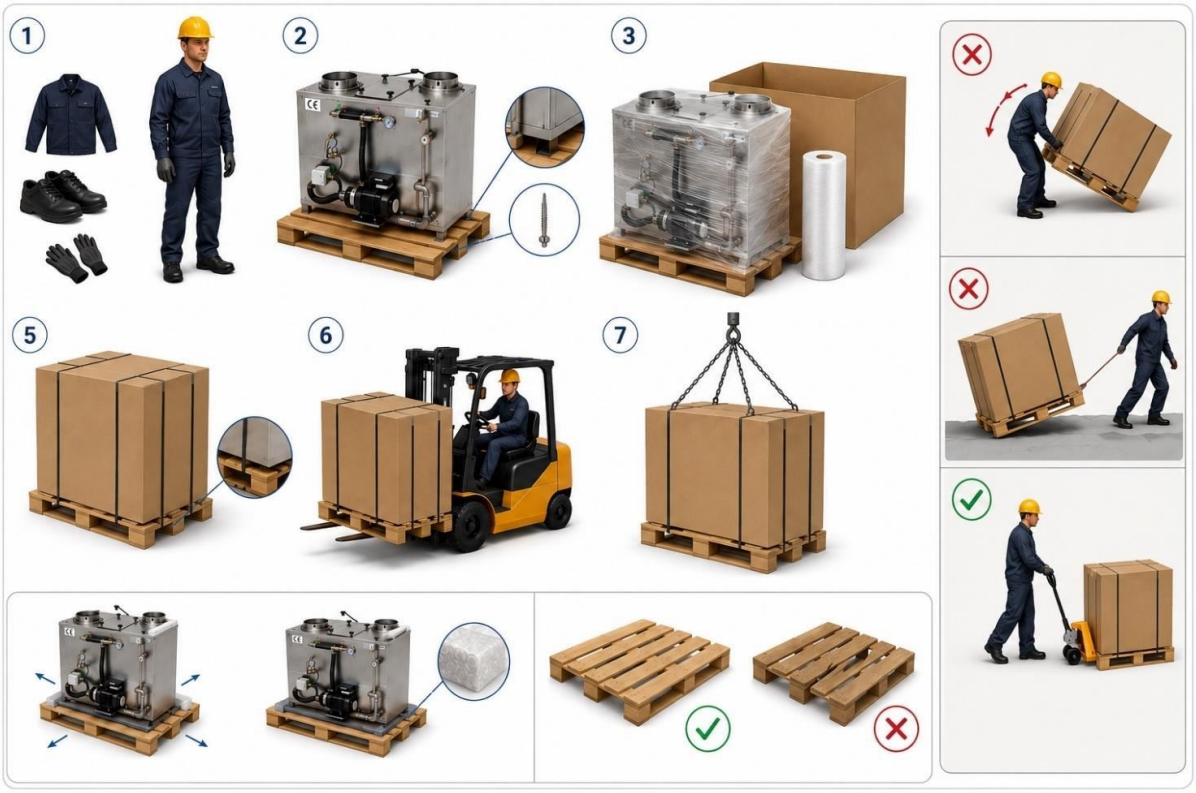

Figure 21 – Packing and handling sequence.

1. Wear work clothing, safety shoes and gloves.
2. Fix the machine to the pallet with 4 wood screws through the holes at the four ends of the feet.
3. Wrap with bubble wrap and protect with a heavy-duty cardboard box.
4. Use pallets and packaging that leave a few centimetres around the machine, to fit shock-absorbing material (bubble wrap, polystyrene). The pallet must be strong and sturdy enough for the loads and stresses of handling.
5. Secure the packaging to the pallet with straps.
6. Lift and move with a forklift or suitable mechanical device; any non-mechanical movement must be carried out by at least 2 people. Do not tilt or drag the pallet: use a pallet truck.
7. When lifting with a crane, pass chains or ropes through the base structures under the machine.

23. Disposal

At the end of its life the machine must be disposed of by authorised operators, separating stainless steel, electrical and electronic components (pump, inverter, panel, actuators), plastics and rubber. The electrical and electronic parts are subject to the legislation on waste

electrical and electronic equipment. Washing water and soot sludge must be disposed of in accordance with local regulations and the requirements of the inspection authority.

24. Warranty

Duration

- 12 months for B2B customers holding a VAT number.
- 24 months for private consumers (B2C) under Italian Legislative Decree 206/2005, Consumer Code.
- Starting from the date shown on the delivery note.

The warranty covers

- Manufacturing defects of components.
- Supply of the defective spare part (installation, technician travel and shipping costs not included).

The warranty does not apply to

- Natural wear of components.
- Incorrect installation or use.
- Failure to follow the operating instructions.
- Unauthorised modifications.
- Lack of or improper maintenance, to be carried out periodically by qualified personnel.
- Improper dismantling, accidents, impacts, damage events.

Service request

1. Send the request by e-mail, describing the problem in detail.
2. Components requested under warranty must be paid for in advance.
3. Replaced defective components must be returned to ETC Group within 15 days.
4. The customer is refunded only after technical inspection has confirmed the manufacturing defect.

25. Frequently asked questions (FAQ)

Quick answers to understand how the machine works and to identify problems. For model-specific values (diameters, connections, nozzles, power ratings, flow rates, tank capacity, voltages) refer to the technical datasheet in Part 1 and the machine rating plate.

A. Function and performance

A.1 What does the machine do?

It removes soot and carbonaceous particulate from combustion fumes by recirculating water washing. It is a water scrubber (wet scrubber): it has no activated carbon filters, no electrostatic field and no ozone generator.

A.2 Does it remove everything coming out of the chimney?

No. The main treatment concerns soot and fine particulate. Visible smoke, vapours, gaseous components and odours are reduced only in part, to an extent that depends on the installation.

A.3 What is the particulate efficiency?

In the documented test to UNI EN 13284-1, carried out by an ACCREDIA accredited laboratory, particulate removal was above 95%. This is the value under those test conditions: it is not a universal guarantee and must not be applied to PM10, PM2.5 or ultrafine particles.

A.4 Why does white vapour come out of the chimney?

The outlet air is saturated with water vapour, at about 50 °C. This is normal and is more visible with cold outside air or high thermal load.

A.5 The water in the tank turns black quickly: is it a fault?

No. The captured dirt colours the water quickly; this is normal, as is a slight acrid smell. Dirty water must be drained and replaced.

A.6 At what temperature do the fumes come out?

On correctly sized wood-fired ovens the outlet temperature is normally between 45 and 50 °C.

A.7 What inlet fume temperature can it withstand?

Inlet fumes at 120–150 °C do not normally cause problems if the machine is correctly sized, full of water and operating normally.

A.8 Can sparks or embers enter the machine?

Occasional sparks or embers are wetted and extinguished along the path. The machine is not designed to receive incandescent material intentionally.

A.9 Which applications are suitable?

Non-toxic combustion fumes with soot and particulate: pizza and wood-fired ovens, grills and barbecues, stoves, biomass boilers, coffee roasting and other combustion appliances with carbonaceous residues.

A.10 Is noise a problem?

The level is about 70 dB(A) or less at 1 m. A new or unusual noise must always be checked.

B. Water and tank

B.1 What liquid is used?

Water only. Detergents, soaps, antifreeze, salts, alcohol, acids and additives are prohibited, unless technically instructed by ETC Group. Do not use antifoam unless instructed by ETC Group.

B.2 What pressure must the mains water have?

Between 1.5 and 3.5 bar at the supply. Above this value a pressure reducer is required.

B.3 Can I use hard water?

With very hard water a water softener is required. Softened water and demineralised water are also permitted.

B.4 Can I use well water?

Not unless it has been analysed and treated. Limescale can damage the machine within a few months.

B.5 How hot can the water in the tank get?

Under the most severe conditions no more than about 80 °C has ever been observed; the temperature is normally lower.

B.6 Can I leave the machine full overnight?

Yes, if it is indoors and there is no risk of frost. It is still better to drain and renew the water at the end of the day. If there is a risk of frost, the machine must be emptied after operation.

B.7 How long does it work without mains water?

About one hour with the water in the tank. Below the minimum level the float switch stops the pump.

B.8 How do I restart after weeks or months of downtime?

Fill the tank and leave the water for 1–2 hours before starting the pump. Then check pressure, noise and spraying.

B.9 How often is the water changed?

At the end of the day or according to frequency of use. Very dirty applications require more frequent changes.

B.10 Do I need to dry the machine after rinsing?

No. It can be filled and put back into operation immediately.

C. Start-up, shutdown and checks

C.1 What do I check at first start-up?

Connections, water supply open, tap positions, drain, power supply, earthing, tightness of the piping and absence of leaks. Then filling, pump start at the intended level and check of the spraying.

C.2 Why does the pump not start as soon as I switch on the power?

Without water the pump must not start until the float switch reaches the first level.

C.3 In what order is the system shut down?

First finish the combustion and close the oven mouth, then switch off the scrubber, and finally carry out the manual or automatic drain.

C.4 The scrubber stopped with the oven lit: what do I do?

If the machine remains full of water and the draught is sufficient, the oven does not need to be switched off immediately. The situation must nevertheless be restored: it is not an operating mode.

C.5 What must the user check every day?

They must know the usual behaviour of the machine and monitor noise, pressure, level, spraying, leaks, vibration and draught.

C.6 What are the warning signs of a fault?

Deviations from the usual behaviour: pump noise, water rushing sound, different pressure, weaker spraying, slower or more frequent filling, level variations, leaks, vibration, reduced draught.

C.7 Do I need to replace components after a certain number of years?

No. Nothing is replaced simply because of the age of the machine: action is taken on actual wear, deterioration or faults.

C.8 Which tasks are for the user and which for the technician?

User: draining and changing the water, cleaning the tank and overflow, internal rinsing, visual check of the nozzles. Technician: electrical parts, adjustments, pump, float switch, solenoid valves, welds and unidentifiable faults.

D. Float switch and solenoid valve

D.1 What does the float switch do?

It manages the levels: it starts the pump at the minimum level and stops filling at the maximum level.

D.2 Can I adjust the float switch?

Normally not: it is factory-set. Adjustment is needed only in particular cases, for example with the machine not level, and must be done with a technician.

D.3 If the float switch is faulty, what is replaced?

The entire float switch assembly, not the single part.

D.4 The machine does not fill with water: what do I check?

In this order: water availability and pressure, float switch and its states, solenoid valve and coil, other components. Electrical checks must be carried out by qualified personnel.

D.5 The level rises up to the overflow: what causes it?

Either the float switch is not cutting off the control signal or the solenoid valve is not closing. To tell the two cases apart, separate the coil from the valve body with the circuit isolated: if the valve closes, the problem is in the control or the float switch; if water still passes, the valve body is stuck or faulty.

D.6 The 0/10 mains pressure gauge does not return to zero: is this normal?

With the machine off, the mains pressure gauge may remain at static pressure. If the machine does not fill, limescale in the solenoid valve or the float switch stuck in maximum position are the causes to check.

E. Pump and pressure gauges

E.1 What pressure should the pump pressure gauge show?

In the typical configuration the reference is about 2 bar. The value must be read in relation to the usual behaviour of the machine.

E.2 The pressure rises towards 2.5–3 bar and spraying weakens: why?

The nozzles or passages are partially blocked. Check the nozzles through the inspection hatch.

E.3 The pressure is very low: what do I check?

Water level, pump inlet, presence of air, obstructions in the impellers and condition of the pump.

E.4 The pressure gauge fluctuates: what does it mean?

Irregular suction, air or cavitation. The first check is the water level.

E.5 What does the pump pressure gauge show with the machine off?

It must return to zero.

E.6 An oily liquid is coming out of the pressure gauge: is it a fault?

The liquid is the glycerine filling: the pressure gauge must be replaced.

E.7 The pump has a new noise: what do I do?

It must always be checked. Typical causes are the fan touching the cover, or hard objects or agglomerates at the inlet or in the impellers.

E.8 What is back-flushing?

With the machine disconnected from the power supply, the technician disconnects the designated section near the pump/pressure gauge outlet and sends clean water in the reverse direction using the washing line. He then refits the hose and clamp and rechecks pressure and spraying.

E.9 How often are the black pump hoses changed?

They are chosen for pressures much higher than operating pressures and, in a correct indoor installation, last as long as the machine. They are replaced if swollen, cracked, deformed or showing abnormal deterioration.

E.10 A clamp is leaking: what do I do?

Tighten it. If the leak continues, check the hose and replace it.

E.11 Can the pump be controlled with the inverter?

No. The inverter is used only to control the speed of the extraction fans mounted above the scrubber; the recirculation pumps are not adjustable.

F. Nozzles, manifolds and internal cleaning

F.1 How do I check the nozzles?

Through the inspection hatch. Weak spraying with high pressure suggests an obstruction.

F.2 How often should the nozzles be cleaned?

With correct water and regular maintenance, periodic cleaning is normally not needed.

F.3 A nozzle is scaled: how is it cleaned?

Competent personnel remove it. Use a suitable descaler, or hydrochloric acid on the removed nozzle, with PPE and safety data sheet. Then rinse thoroughly. To clear the hole, use a stiff, thin tool without deforming the geometry.

F.4 Are the stainless steel nozzles replaced often?

No. They can almost always be recovered by cleaning; they are replaced only if damaged or deformed.

F.5 Can the water manifolds become blocked?

This is very rare. They are stainless steel pipes of about 1/2 inch, accessible from tees and elbows by removing the external rubber connections, with a flexible probe or by dismantling and washing with water and brushes.

F.6 Paper, wood, ash or lumps of soot have got in: what do I do?

With the machine switched off, made safe, drained and cleaned, remove them. For residues in the tank, a professional wet and ash vacuum cleaner may be used.

F.7 Can I remove the internal baffles to clean them?

Removal is normally not needed. If they are removed during extraordinary maintenance, mark their position and orientation and entrust the work to technical personnel.

F.8 Can I remove manifolds or internal parts to increase draught?

No. The factory configuration must be maintained.

F.9 How often should the machine be rinsed?

At least once a week, to remove coarse dirt and check for foreign bodies.

G. Drain, timer, foam and grease

G.1 How do I programme the automatic valve timer?

Refer to the manual of the timer supplied. ETC Group provides assistance by telephone or video call. Do not set values at random.

G.2 The automatic valve does not open: what do I check?

Impurities, sediment or limescale, or a problem with the actuator or control. Mechanical and electrical diagnosis must be carried out in safe conditions.

G.3 The valve opens but no water comes out: why?

There is an obstruction downstream, in the drain pipe.

G.4 The tank does not empty completely: what is wrong?

The most likely cause is an obstruction in the pipe after the machine, especially with cross-sections smaller than Ø40 mm or routes that encourage build-up. The line must be cleaned up to the end point.

G.5 There is a lot of foam: what do I do?

Drain, rinse and fill with clean water. If the foam reappears immediately, change the water more often.

G.6 I cook on grills and barbecues: does anything change?

Grease, ash and soot form very hard deposits: more frequent draining and cleaning are needed. For these applications ETC Group can provide, from the outset, a configuration with double valve and additional water supply, which uses the overflow to remove surface grease.

G.7 Where should the water be discharged?

The drain destination must be checked according to the installation and local rules (trap, settling tank, grease separation). ETC Group supplies the machine; compliance of the drain is the responsibility of the site.

G.8 Smoke comes out of the sinks or drains in the premises: why?

The drain is not correctly separated from the network: a trap or equivalent device is required.

H. Flue, draught and extraction fan

H.1 How often is the flue upstream of the scrubber cleaned?

The untreated section, between generator and scrubber, must be cleaned at least every three months, sooner if very dirty or if the draught drops. It is also the first check if a machine that has always worked draws poorly.

H.2 What flue is needed after the scrubber?

A watertight duct, suitable for very humid air and condensate. The specified material is AISI 316L stainless steel, with joints and installation suitable for condensate.

H.3 How is the downstream section laid?

Avoiding downward sections, pockets and pooling. The indicative slope is upward, at least 5°, with joints that do not let condensate escape.

H.4 What terminal do I fit at the top?

A terminal open upwards, truncated-cone or open. Chinese hats, wind cowls and restrictive terminals are not recommended.

H.5 Where is the scrubber positioned?

It can be close to the oven, in an intermediate or end position. Proximity to the generator reduces the untreated flue section. It can be lower than the oven only with correctly sized forced extraction.

H.6 When is an extraction fan needed?

When natural draught is insufficient, with high pressure losses, with several appliances or when the flow rate is set by design.

H.7 Does the extraction fan go before or after the scrubber?

After, downstream. Upstream it would create overpressure and smoke leaks from hatches, joints and overflow.

H.8 Can I rest the extraction fan on the scrubber?

No. It must be installed with its own brackets or on an independent structure, so as not to transfer weight and vibration to the machine.

H.9 How is the extraction fan selected?

On the performance curve, at the duty point: required flow rate and total static pressure. Motor power and free-air flow rate are not selection criteria.

H.10 How is the extraction fan inverter adjusted?

The setting is defined during commissioning. In ETC Group configurations with a 0–50 scale, do not go below about 15, unless specifically calibrated. In ordinary use the user should only switch it on and off.

H.11 The extraction fan is too strong: does it damage the machine?

Normally not, but it can draw heat away from the oven.

H.12 The extraction fan stopped with the oven lit: what do I do?

You can finish temporarily if the residual draught is sufficient. If smoke appears in the room, reduce the fuel and restore the extraction fan.

H.13 Where do I drain the condensate from the stainless steel extraction fan?

Connect the condensate drain to a suitable drain. Where the configuration allows, it can instead be closed, so that the condensate flows back towards the scrubber. No leaks or pooling.

H.14 Smoke comes out of the hatch or joints: what do I check?

First that the knobs are tightened evenly, then any overpressure due to a badly installed or badly adjusted fan.

H.15 Can I connect two ovens to the same scrubber?

Yes, if the machine is sized for it. NEWSCRUB AH 250 BIOMASS is not the usual solution for two ovens; NEWSCRUB AH 300 BIOMASS can serve two if design and flow rates allow; for larger models this is assessed case by case.

H.16 If one of the two ovens is off, what do I do?

Its branch can be closed with the damper provided. Leaving it open does not in itself cause problems.

I. Installation, safety and service

I.1 What base does the machine stand on?

On a rigid, stable, level base suitable for the operating weight. Anti-vibration mounts under the machine are not the usual solution: an elastic base amplifies vibrations through resonance.

I.2 Can I install the machine outdoors?

Yes, with a cover. The partial cover is better than nothing and protects the upper electrical parts, but does not make the machine weatherproof. With direct rain and sun, frost, marine or aggressive environments the full cover is required.

I.3 What happens if the machine is left exposed without a cover?

Continuous exposure damages the solenoid valve coil, the motorised valve, the connections and the external components of the pump.

I.4 What can I do outdoors in cold weather?

If there is a risk of frost, the machine must be emptied after operation. With the full cover, the anti-freeze heating mat with adjustable thermostat is available as an option: it prevents freezing of water and piping and condensation on the electrical panel (chap. 5.4).

I.5 Is it enough to see the earth wire?

No. The effectiveness of the earthing must be checked with instruments by qualified personnel. Leakage currents and potential differences can cause localised corrosion and perforation.

I.6 The RCD or circuit breaker trips: what could it be?

An electrical fault or leakage: solenoid valve coil, water in the motorised drain valve, pump, wet connections or contacts, damaged wiring. Diagnosis must be made by a qualified electrician, with the machine made safe.

I.7 The casing weld leaks: what do I do?

Under warranty, ETC Group must be informed before any work: it may intervene or agree on a qualified welder from the customer. Outside the warranty the customer may

make their own arrangements, but should inform ETC Group so that the cause can be checked, for example vibration or other external causes.

I.8 Who can open the electrical panel?

Qualified personnel only. After switch-off, wait at least 15 minutes before opening the panel or accessing the terminals.

I.9 Where can I get service?

Telephone +39 0541 1646150 · +39 0541 955062, WhatsApp +39 373 7755779, e-mail informazioni@etcgroupsrl.biz. For service calls, the clause in the Warranty chapter applies.

26. Contacts

Head office	Strada delle Campagne 10, 61010 Tavullia (PU), Italy
Telephone	+39 0541 1646150 · +39 0541 955062
WhatsApp	+39 373 7755779
E-mail	informazioni@etcgroupsrl.biz
PEC	etcgroupsrl@pec.libero.it
Web	www.etcgroupsrl.it
VAT No. / EORI	IT04083110405
REA / SDI	PS-196574 · M5UXCR1
Hours	Mon-Fri 08:00-12:00 / 13:00-17:00

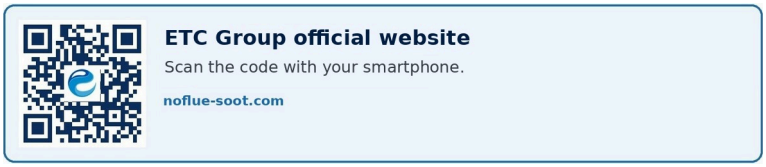

Official website: scan the code with your smartphone.

Artur Cokaj
Technical Manager under D.M. 37/2008 – Lett. A, C, D, E ETC Group S.r.l. – Tavullia (PU), Italy

Signature and stamp _____

ANNEX A · Motorised drain valves

The tank of NEWSCRUB AH machines is drained through a stainless-steel ball valve controlled from the control panel (chapter 14). ETC fits three valve types: this annex explains how to identify them, how to drain the machine, including manually, and how to connect them to the control panel.

TYPE	HOW TO IDENTIFY IT	MANUAL OPERATION
Type 1 · ETC TM3	compact blue actuator, round position indicator on the cover, no hand crank	not available, electrical operation only
Type 2 · compact actuator with hand crank	aqua-green actuator with black hand crank on the cover and brass button under the base	hand crank, after pressing the brass button
Type 3 · 30 N·m actuator	larger actuator (155 × 90 × 115 mm), M18 × 1.5 cable gland, internal terminal block	with Allen key and handle

The type fitted to the machine is stated in the supply documents. If in doubt, send a photo of the valve to ETC service.

Draining the machine

STEP 1

Automatic draining

Switch off the machine from the control panel by setting the selector to position II. The valve opens automatically, the red indicator light comes on and the tank drains. Leave the selector in II until draining is complete.

STEP 2

If the valve does not open

Check that the control panel is powered and that the red indicator light is on. If the control panel gives the command but the valve remains closed, the actuator is faulty and must be replaced.

STEP 3

Manual draining

Disconnect power to the control panel and drain manually: **type 2** with the brass button and hand crank, **type 3** with the Allen key and handle. **type 1 TM3** has no manual operation: contact ETC service to replace the actuator.

STEP 4

After manual draining

Close the valve again and, on type 2, re-engage the gearmotor by pulling the brass button downwards until it clicks. Before restarting the machine, check that the valve responds to the selector again.

⚠ BEFORE ANY WORK

Set the main switch on the control panel to OFF and disconnect power to the machine. With hot water, wait for it to cool before opening the valve manually or removing it.

Valve wires in the control panel

FUNCTION	TYPE 1 · TM3 (3B)	TYPE 2	TYPE 3
common / neutral	black	blue	terminal 3
closing (phase after the main switch)	red	red	terminal 4
opening (selector contact 4, timer contact 18)	green	yellow	terminal 2
earth	valve body	valve body	terminal ⏚

The diagrams in chapter 14 show the wire colours for the type 2 valve; for the other types, use the correspondence shown in the table. With a **2B** control TM3 valve, the red wire must not be connected to the permanent phase: without a timer it goes to selector contact 2; with a timer it goes to timer contact 16, with common 15 powered from selector contact 2.

⚠ CONNECTION BY QUALIFIED PERSONNEL

The control panel and valve must be connected by a qualified electrician in accordance with D.M. 37/2008 and CEI 64-8, with the supply line isolated. There is a risk of electric shock.

Type 1 · ETC TM3 valve

Rotary electric actuator mounted on a two-way stainless-steel ball valve. With the opening signal, the gearmotor turns the stem through 90°; with the closing signal, the ball returns across the flow path and closes the passage. An indicator on the cover shows the position of the ball. It has no manual operation: do not force the valve with tools on the actuator or on the stem.

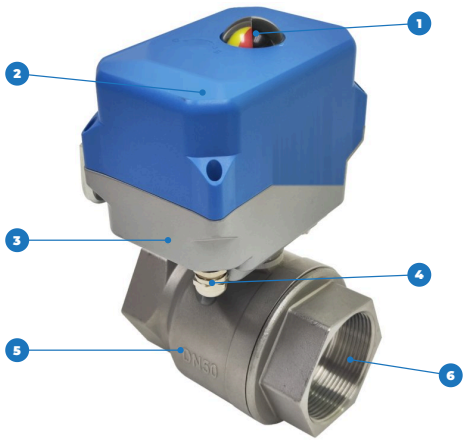

Fig. A1 · Main components of the TM3 valve.

1. Position indicator
2. Actuator cover
3. Base with ISO 5211 mounting
4. M12 × 1.5 cable gland with cable
5. Stainless-steel valve body marked with the DN
6. Female threaded connection

DATA	VALUE
Diameters	DN15 · DN20 · DN25 · DN32 · DN40 · DN50, G female threaded connections
Nominal pressure and fluid	1.6 MPa (16 bar) · water from 0 °C to +95 °C
Power supply and control	AC 96 ÷ 230 V, 3B control (version for ETC scrubbers)
Torque, power, operating time	≤ 30 N·m · ≤ 35 W · 5 ÷ 12 s
Degree of protection and ambient temperature	IP65 · -30 °C ÷ +70 °C
Mounting and cable entry	ISO 5211 F03 / F04 / F05, 11 × 11 mm square · M12 × 1.5 cable gland

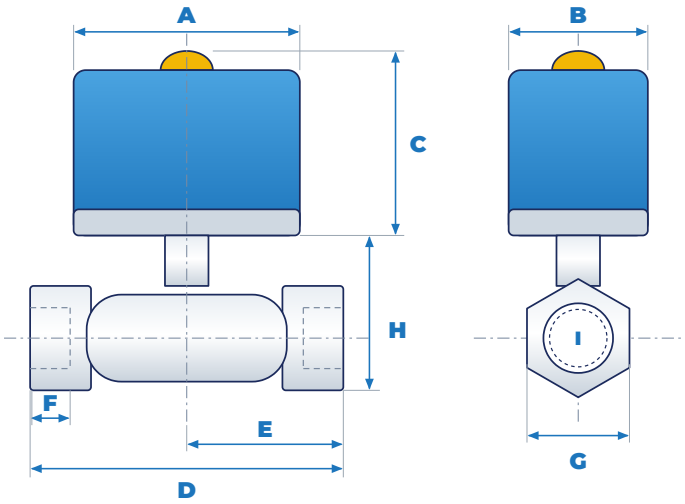

Fig. A2 · TM3 valve dimensions. A = 110, B = 73.6, C = 98 mm; other dimensions in the table.

MODEL	D	E	F	G	H	I
DN15	57	28.5	12.5	27	56.2	G ½
DN20	70	35	15.6	32	66	G ¾
DN25	82	41	19	38	78.5	G 1
DN32	92	46	24	48	84	G 1¼
DN40	100	50	27	54	91	G 1½
DN50	117	58.5	32.5	65	106	G 2

D valve body length · E stem centreline - end · F thread length · G hexagon across flats · H body height up to actuator base · I connection thread.

Type 2 · Valve with hand-crank manual operation

AISI 304 or 316 stainless-steel ball valve with compact electric actuator. The **hand crank** on the cover follows the rotation of the ball and shows its position; the **brass button (P)** under the base disengages the gearmotor and allows the valve to be turned manually. The actuator is fixed to the valve body on ISO 5211 F03 or F05 mountings.



Fig. A3 · Type 2 valve installed on a section of drain pipework.

With the selector in I the valve remains closed; when the machine is switched off from the control panel (selector in II), the valve opens automatically and the tank drains. **If the valve does not open at switch-off, the actuator is faulty and must be replaced**; in the meantime the machine can be drained manually. Until the brass button is pressed, the hand crank will not turn because the mechanism remains engaged with the gearmotor: do not force it.

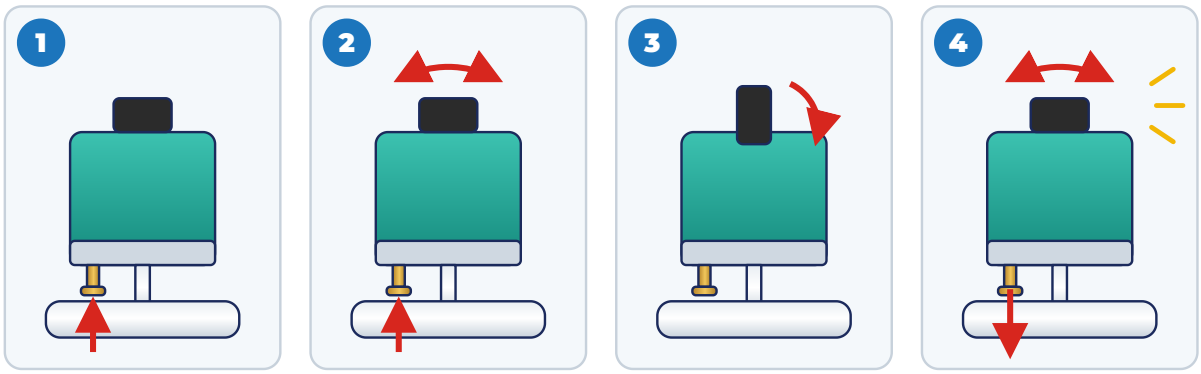

Fig. A4 · Manual operation: steps 1-3 release and opening, step 4 return to automatic operation.

STEP 1

Press the brass button

Disconnect power from the control panel. Push the brass button under the actuator base upwards and keep it pressed.

STEP 2

Release the mechanism

Keeping the button pressed, move the hand crank to the right and left until you feel the mechanism release.

STEP 3

Open the valve

Turn the hand crank through 90° to open the valve and allow the water to drain. The same hand crank is used to close the valve again.

STEP 4

Return to automatic operation

When draining is complete, close the valve. Pull the brass button downwards and turn the hand crank to the right and left until you hear the click that re-engages the gearmotor. Without this step, the valve will no longer respond to the control panel.

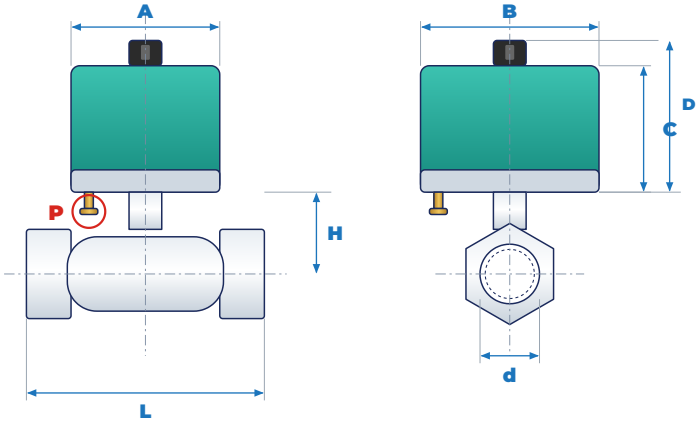

Fig. A5 · Type 2 valve dimensions. A = 71.1, B = 87, C = 74, D = 86.5 mm (with hand crank); P brass button.

DIAMETER	D	L	H
DN15	15	62	55
DN20	20	71	63
DN25	25	81	78
DN32	32	93	84
DN40	40	102	91
DN50	50	118	107

d bore diameter · L valve body length · H pipe centreline - actuator base.

Type 3 · Valve with 30 N·m actuator

Larger electric actuator, with internal terminal block and adjustable limit switches, fixed to the valve body on ISO 5211 F03 or F05 mountings. The manual operation pin is on the base and is pressed with an Allen key.



Fig. A6 · Type 3 actuator base: mounting flange and, on the right, manual operation pin.

DATA	VALUE
Power supply	AC 220 V 50 Hz or DC 24 V, according to the rating plate
Power and rated current	AC 20 W, 0.2 A · DC 2 W, 0.15 A
Torque, operating time, rotation	30 N·m · 5 ÷ 15 s · 0 ÷ 90°
Degree of protection	IP67
Valve mounting	ISO 5211 F03 (4 × M5, Ø 36) and F05 (4 × M6, Ø 50), depth 10 mm; 11 × 11 mm square output, depth 18 mm
Cable entry and auxiliary contacts	M18 × 1.5 cable gland · volt-free valve-open and valve-closed contacts, max 250 V AC 10 A

TERMINAL	CONNECTION
⏚	protective conductor (PE)
2	opening phase
3	power supply common (neutral in AC)
4	closing phase
5 · 6	outputs for position indicator lights (5 = valve open)
7 · 8 · 9	auxiliary contacts: 7 common, 8 valve open, 9 valve closed

MANUAL OPERATION

STEP 1

Disconnect power

Set the main switch on the control panel to OFF.

STEP 2

Release the control

Using an Allen key, press the manual operation pin on the actuator base inwards.

STEP 3

Operate the valve

Keeping the pin pressed, turn the valve with the handle to the fully open position to drain, then return it to fully closed. When the pin is released, operation returns to electric.

ADJUSTING THE LIMIT SWITCHES

Only if the valve does not reach the fully open or fully closed position, with power disconnected. **Opening**: valve fully open, loosen the lock nut by one turn and turn the yellow cam D2 anticlockwise until it touches the microswitch (two clicks). **Closing**: valve fully closed, turn the red cam D1 clockwise up to the microswitch (two clicks) and tighten the nut.

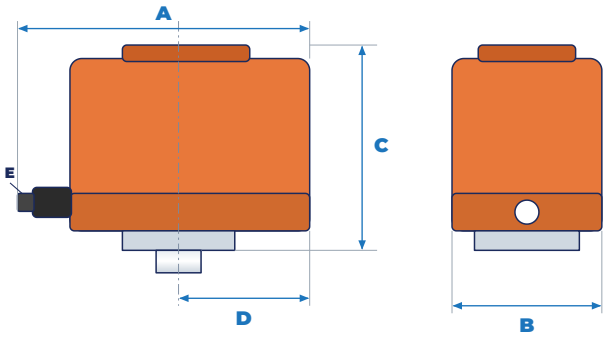

Fig. A7 · Type 3 actuator dimensions: A 155 (with cable gland), B 90, C 115, D 81 mm (output axis - side), E M18 × 1.5 cable gland.

Valve troubleshooting

PROBLEM	POSSIBLE CAUSE	REMEDY
At switch-off the valve does not open	actuator faulty	drain manually (types 2 and 3) and replace the actuator
	no phase on the opening wire or terminal	check the selector, timer contact 18 and connections
	manual operation not re-engaged (type 2)	pull the brass button downwards and turn the hand crank until it clicks
The hand crank does not turn (type 2)	brass button not pressed	press the button and move the hand crank until it releases
The valve does not close fully	deposits on the ball	disconnect power, remove and clean the valve
	limit switches out of adjustment (type 3)	adjust cams D1 and D2
Random or irregular operation	interference from motors, inverters, contactors	separate control cables from power cables, screened cable, intermediate relay

INDICATIVE MEASUREMENTS

Valve measurements and weights are indicative and must not be used as a design basis. The actual drawing is supplied only on explicit request, after construction; ETC Group S.r.l. accepts no liability for drawings that have not been explicitly requested.

Notes

Date	Note

Notes

Date	Note

ETC GROUP S.R.L.
AIR FILTRATION TECHNOLOGIES

CE

EC DECLARATION OF CONFORMITY

No. DIC-2025-01 · Rev. 01

Company: ETC Group S.r.l.
Strada delle Campagne n. 10, 61010 Tavullia (PU), Italia

P.IVA: IT04083110405
Tel: +39 0541 1646150 | +39 0541 955062
Email: informazioni@etcgroupsrl.biz

01 · PRODUCT NAME / MODELS

Product name:	Soot and grease fume scrubbers SCRABER / AH
Models:	AH 200 · AH 250 · AH 300 · AH 350 · AH 400 · AH 500 · AH 600 · Clinear 250L · Clinear 300L · Clinear 400L · X/1
Description:	System designed and manufactured for the washing and abatement of fumes and pollutants generated by any type of cooking process (electric, gas, charcoal, wood).

The system provides:

- Abatement of total particulate matter
- Reduction of carbon dioxide (CO_2) emissions
- Abatement of nitrogen oxides (NOx), carbon monoxide (CO), odors, and fine particulates
- Has the features to also work as a fire prevention system in extraction ducts

02 · APPLICABLE EUROPEAN DIRECTIVES

Direttiva / Directive / Richtlinie	Descrizione / Description / Beschreibung
2006/42/EC	Machinery Directive
2014/35/EU	Low Voltage Directive
2014/30/EU	Electromagnetic Compatibility Directive

03 · APPLIED HARMONISED STANDARDS

Norma / Standard / Norm	Descrizione / Description / Beschreibung
EN ISO 12100:2010	Safety of machinery – General principles for design
EN 60204-1:2018	Safety of machinery – Electrical equipment of machines

04 · SOUND PRESSURE LEVEL (ISO 11202)

Sound pressure level (ISO 11202)	**70 dB(A)**	*IMQ Certified · K = 4 dB*

05 · IMQ CERTIFICATION

Body:	IMQ S.p.A. – Milan (Italy)
Certificate:	Type Examination Certificate No. IMQ 297 Rev. 0
Reference:	Essential requirements of Directive 2006/42/EC · IMQ assessment file 50AR00040
Issue date:	16/07/2018

At the time of manufacture and placing on the market, the above models were tested at IMQ and obtained IMQ certification No. 297.

06 · SIGNATURE / ARTUR COKAJ

Place: Tavullia (PU), Italy
Date: 01/01/2025

Signature:

ETC Group S.r.l.
Strada Delle Campagne 10
61010 Tavullia PU
P.Iva e C.f IT 04083110405

Artur Cokaj
Technical Manager

First issue: 01/01/2025 · Revision 01 – reprint of 19/11/2026 with updated company data and IMQ certification

ETC GROUP S.R.L

AIR FILTRATION TECHNOLOGIES

Italian Technologies for the Treatment
of Air and Fumes

Address: Strada delle Campagne 10,
61010 Tavullia (PU), Italy

Tel: +39 0541 1646150 | +39 0541 955062

WhatsApp: +39 3737755779

Email: informazioni@etcgroupsrl.biz

PEC: etcgroupsrl@pec.libero.it

Web: www.etcgroupsrl.it

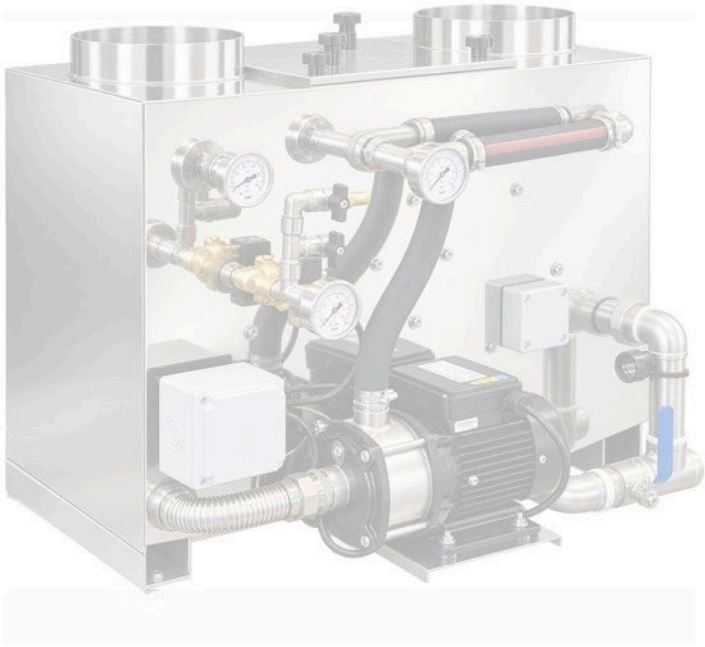

Made in Italy